duma rent
www.duma-rent.com

JLG®

Operators and Safety Manual

Model

600SC
600SJC
660SJC

3120897
July 15, 2003

CE

NQA ISO9001 REGISTERED COMPANY
UKAS QUALITY MANAGEMENT 015

JLG®

JLG Industries (Australia)
P.O. Box 5119
11 Bolwarra Road
Port Macquarie
N.S.W. 2444
Australia
Phone: (61) 2 65 811111
Fax: (61) 2 65 810122

JLG Industries (UK)
Unit 12, Southside
Bredbury Park Industrial Estate
Bredbury
Stockport
SK6 2sP
England
Phone: (44) 870 200 7700
Fax: (44) 870 200 7711

JLG Deutschland GmbH
Max Planck Strasse 21
D-27721 Ritterhude/Ihlpohl
Bei Bremen
Germany
Phone: (49) 421 693 500
Fax: (49) 421 693 5035

JLG Industries (Italia)
Via Po. 22
20010 Pregnana Milanese - MI
Italy
Phone: (39) 02 9359 5210
Fax: (39) 02 9359 5845

JLG Latino Americana Ltda.
Rua Eng. Carlos Stevenson,
80-Suite 71
13092-310 Campinas-SP
Brazil
Phone: (55) 19 3295 0407
Fax: (55) 19 3295 1025

JLG Europe B.V.
Jupiterstraat 234
2132 HJ Foofddorp
The Netherlands
Phone: (31) 23 565 5665
Fax: (31) 23 557 2493

JLG Industries (Norge AS)
Sofeimyrveien 12
N-1412 Sofienyr
Norway
Phone: (47) 6682 2000
Fax: (47) 6682 2001

JLG Polska
Ul. Krolewska
00-060 Warsawa
Poland
Phone: (48) 91 4320 245
Fax: (48) 91 4358 200

JLG Industries (Europe)
Kilmartin Place,
Tannochside Park
Uddingston G71 5PH
Scotland
Phone: (44) 1 698 811005
Fax: (44) 1 698 811055

JLG Industries (Pty) Ltd.
Unit 1, 24 Industrial Complex
Herman Street
Meadowdale
Germiston
South Africa
Phone: (27) 11 453 1334
Fax: (27) 11 453 1342

Plataformas Elevadoras
JLG Iberica, S.L.
Trapadella, 2
P.I. Castellbisbal Sur
08755Castellbisbal
Spain
Phone: (34) 93 77 24700
Fax: (34) 93 77 11762

JLG Industries (Sweden)
Enkopingsvagen 150
Box 704
SE - 175 27 Jarfalla
Sweden
Phone: (46) 8 506 59500
Fax: (46) 8 506 59534

duma rent www.duma-rent.com

FOREWORD

This manual is a very important tool! Keep it with the machine at all times.

The purpose of this manual is to provide owners, users, operators, lessors, and lessees with the precautions and operating procedures essential for the safe and proper machine operation for its intended purpose. It is important to stress proper machine usage at all times. All information in this manual must be read and understood before any attempt is made to operate the machine.

Because the manufacturer has no direct control over machine operation and application, proper safety practices are the responsibility of the owners, users, operators, lessors, and lessees.

All instructions in this manual are based upon the use of the machine under proper operating conditions, with no deviations from the original design. Any alteration or modification of the machine is strictly forbidden without written approval from JLG Industries, Inc.

Due to continuous product improvements, JLG Industries, Inc. reserves the right to make specification changes without prior notification. Contact JLG Industries, Inc. for updated information.

SAFETY ALERT SYMBOLS AND SAFETY SIGNAL WORDS

This is the Safety Alert Symbol. It is used to alert you to the potential personal injury hazards. Obey all safety messages that follow this symbol to avoid possible injury or death

The Safety Alert Symbol will be used with the appropriate Safety Signal Word of “DANGER” “WARNING” or “CAUTION” to a potential hazard and designate a level of seriousness. The Safety Signal Words are inserted throughout this manual in Black/White. On the machine, the Safety Signal Words will have either a Red, Orange, or Yellow background as part of a safety sign or decal. The “DANGER”, “WARNING”, and “CAUTION” Safety Signal Words, definitions, and associated colors are as follows:

DANGER

INDICATES AN IMMINENTLY HAZARDOUS SITUATION WHICH, IF NOT AVOIDED, WILL RESULT IN SERIOUS INJURY OR DEATH. THIS SIGNAL WORD IS USED IN THE MOST EXTREME CASES. WHEN INSTALLED ON THE MACHINE, THIS SIGNAL WORD WILL HAVE A RED BACKGROUND AS PART OF A DECAL.

WARNING

INDICATES A POTENTIALITY HAZARDOUS SITUATION WHICH, IF NOT AVOIDED, COULD RESULT IN SERIOUS INJURY OR DEATH. WHEN INSTALLED ON THE MACHINE, THIS SIGNAL WORD WILL HAVE AN ORANGE BACKGROUND AS PART OF A DECAL.

CAUTION

INDICATES A POTENTIALITY HAZARDOUS SITUATION WHICH IF NOT AVOIDED, MAY RESULT IN MINOR OR MODERATE INJURY. IT MAY ALSO BE USED TO ALERT AGAINST UNSAFE PRACTICES. WHEN INSTALLED ON THE MACHINE, THIS SIGNAL WORD WILL HAVE A YELLOW BACKGROUND AS PART OF A DECAL.

The “IMPORTANT” Safety Signal Word may also appear in this manual or on the machine. This Safety Signal Word typically will not appear with the Safety Alert Symbol, but contains important information that must be followed for safe and proper operation, The “IMPORTANT” Safety Signal Word definition and associated color is as follows.

IMPORTANT

INDICATES PROCEDURES ESSENTIAL FOR SAFE OPERATION AND WHICH, IF NOT FOLLOWED, MAY RESULT IN A MACHINE MAL-FUNCTIONED DAMAGE. WHEN INSTALLED IN A MACHINE, THIS SIGNAL WORD WILL HAVE A GREEN BACKGROUND AS PART OF A DECAL.

WARNING

ALL SAFETY-RELATED BULLETINS MUST BE ACCOMPLISHED ON THIS PRODUCT. JLG INDUSTRIES, INC. MAY HAVE ISSUED SAFETY-RELATED BULLETINS FOR THIS JLG PRODUCT. CONTACT JLG INDUSTRIES, INC. OR THE LOCAL AUTHORIZED JLG DEALER FOR INFORMATION REGARDING SAFETY-RELATED BULLETINS WHICH MAY HAVE BEEN ISSUED FOR THIS PRODUCT.

IMPORTANT

FOR THE PURPOSE OF RECEIVING SAFETY-RELATED BULLETINS, IT IS IMPORTANT THAT THE CURRENT OWNER OF THIS UNIT ENSURES JLG INDUSTRIES, INC. HAS UPDATED OWNERSHIP INFORMATION. CONTACT JLG INDUSTRIES, INC. TO ENSURE THAT THE CURRENT OWNER RECORDS ARE UPDATED AND ACCURATE.

IMPORTANT

JLG INDUSTRIES, INC. MUST BE NOTIFIED IMMEDIATELY IN ALL INSTANCES WHERE JLG PRODUCTS HAVE BEEN INVOLVED IN AN ACCIDENT INVOLVING BODILY INJURY OR DEATH OF PERSONNEL OR WHEN SUBSTANTIAL DAMAGE HAS OCCURRED TO PERSONAL PROPERTY OR THE JLG PRODUCT.

FOR :

- Accident Reporting
- Product Safety Publications
- Current Owner Updates
- Questions Regarding Product Safety
- Standards and Regulations Compliance Information
- Questions Regarding Special Product Applications
- Questions Regarding Product Modifications

CONTACT :

Product Safety and Reliability Department
JLG Industries, Inc.
1 JLG Drive
McConnellsburg, PA 17233

Toll Free: 877-JLG-SAFE
877-554-7233

E-mail: ProductSafety@JLG.com

REVISION LOG

Original Issue	-	February 2, 2000
Revised	-	March 10, 2000
Revised	-	July 15, 2003

TABLE OF CONTENTS

SUBJECT - SECTION, PARAGRAPH **PAGE NO.**

SECTION - FOREWORD

SECTION 1 - SAFETY PRECAUTIONS

1.1 General 1-1
1.2 Pre-Operation 1-1
1.3 Operation 1-2
1.4 Towing, Lifting, and Hauling 1-5
1.5 Maintenance 1-6

SECTION 2 - PREPARATION AND INSPECTION

2.1 General 2-1
2.2 Preparation For Use 2-1
2.3 Delivery and Frequent Inspection 2-1
2.4 Daily Walk-around Inspection 2-5
2.5 Daily Functional Check 2-9
2.6 Battery Maintenance 2-14
2.7 Track Adjustment - Adjust 2-14
2.8 Final Drive Oil Level Check 2-16

SECTION 3 - USER RESPONSIBILITIES AND MACHINE CONTROL

3.1 General 3-1
3.2 Personnel Training 3-1
3.3 Operating Characteristics and Limitations 3-2
3.4 Controls and Indicators 3-5
3.5 Placards and Decals 3-12
3.6 Hydraulic Tool Circuit Instructions (Optional) 3-12

SECTION 4 - MACHINE OPERATION

4.1 Description 4-1
4.2 General 4-1
4.3 Engine Operation 4-2
4.4 Traveling (Driving) 4-2
4.5 Steering 4-4
4.6 Parking and Stowing 4-4
4.7 Platform 4-4
4.8 Boom 4-5
4.9 Shut Down and Park 4-5
4.10 Tie Down and Lifting 4-6
4.11 Towing Information 4-6

SECTION 5 - OPTIONAL EQUIPMENT

5.1 Cold Start Kit (Diesel Engine) 5-1
5.2 Travel Alarm 5-1
5.3 Electric Generator 5-1
5.4 Rotating Beacon 5-1
5.5 Cylinder Bellows 5-1
5.6 Boom Wipers 5-1
5.7 Hostile Environment Package 5-1
5.8 Motion Alarm 5-1

TABLE OF CONTENTS (continued)

SUBJECT - SECTION, PARAGRAPH **PAGE NO.**

SECTION 6 - EMERGENCY PROCEDURES

6.1 General 6-1
6.2 Emergency Towing Procedures 6-1
6.3 Emergency Controls and Their Locations 6-1
6.4 Emergency Operation 6-2
6.5 Incident Notification 6-2

SECTION 7 - INSPECTION AND REPAIR LOG

LIST OF FIGURES

FIGURE NO. **TITLE** **PAGE NO.**

2-1. Machine Nomenclature - 660SJC 2-4
2-2. Daily Walk-Around Inspection Diagram 2-6
2-3. Daily Walkaround Inspection Points -Sheet 1 2-7
2-4. Daily Walkaround Inspection Points - Sheet 2 2-8
2-5. Drive Function Operating Range Diagrams 2-11
2-6. Lubrication Point Location 2-12
2-7. Battery Jump Start Post 2-14
2-8. Track Orientation 2-14
2-9. Torque Chart 2-17
3-1. Position of Least Forward Stability 3-3
3-2. Position of Least Backward Stability 3-4
3-3. Ground Control Indicator Panel 3-6
3-4. Ground Control Station 3-7
3-5. Platform Control Console 3-9
3-6. Control Panel Symbols - Sheet 1 3-14
3-7. Control Panel Symbols - Sheet 2 3-15
3-8. Decal Location - Sheet 1 3-16
3-9. Decal Location - Sheet 2 3-17
3-10. Decal Location - Sheet 3 3-18
4-1. Machine Motion Hazard 4-3
4-2. Machine Tie Down 4-8
4-3. Lifting Chart 4-9

LIST OF TABLES

TABLE NO. **TITLE** **PAGE NO.**

1-1 Minimum Safe Approach Distances (M.S.A.D.) 1-4
2-1 Lubrication Chart 2-13
7-1 Inspection and Repair Log 7-1

SECTION 1. SAFETY PRECAUTIONS

1.1 GENERAL

This section outlines the necessary precautions for proper and safe machine usage and maintenance. In order to promote proper machine usage, it is mandatory that a daily routine is established based on the content of this manual. A maintenance program, using the information provided in this manual and the Service and Maintenance Manual, must also be established by a qualified person and must be followed to ensure that the machine is safe to operate.

The owner/user/operator/lessor/lessee of the machine should not accept operating responsibility until this manual has been read, training is accomplished, and operation of the machine has been completed under the supervision of an experienced and qualified operator.

If there are any questions with regard to safety, training, inspection, maintenance, application, and operation, please contact JLG Industries, Inc. ("JLG").

⚠ WARNING

FAILURE TO COMPLY WITH THE SAFETY PRECAUTIONS LISTED IN THIS MANUAL COULD RESULT IN MACHINE DAMAGE, PROPERTY DAMAGE, PERSONAL INJURY OR DEATH.

1.2 PRE-OPERATION

Operator Training and Knowledge

- The Operators and Safety Manual must be read and understood in its entirety before operating the machine. For clarification, questions, or additional information regarding any portions of this manual, contact JLG Industries, Inc.

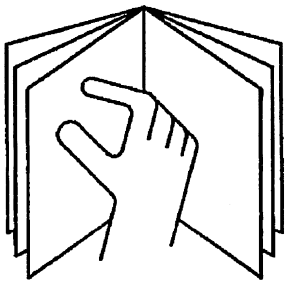

- An operator must not accept operating responsibilities until adequate training has been given by competent and authorized persons.
- Allow only those authorized and qualified personnel to operate the machine who have demonstrated that they understand the safe and proper operation and maintenance of the unit.
- Read, understand, and obey all DANGERS, WARNINGS, CAUTIONS, and operating instructions on the machine and in this manual.
- Ensure that the machine is to be used in a manner which is within the scope of its intended application as determined by JLG.
- All operating personnel must be familiar with the emergency controls and emergency operation of the machine as specified in this manual.
- Read, understand, and obey all applicable employer, local, and governmental regulations as they pertain to your utilization and application of the machine.

Workplace Inspection

- Precautions to avoid all hazards in the work area must be taken by the user before operation of the machine.
- Do not operate or raise the platform from a position on trucks, trailers, railway cars, floating vessels, scaffolds or other equipment unless the application is approved in writing by JLG.
- Before operation, check work area for overhead hazards such as electric lines, bridge cranes, and other potential overhead obstructions.
- Check floor surfaces for holes, bumps, drop-offs, obstructions, debris, concealed holes, and other potential hazards.
- Check the work area for hazardous locations. Do not operate the machine in hazardous environments unless approved for that purpose by JLG.
- Ensure that the ground conditions are adequate to support the maximum tire load indicated on the tire load decals located on the chassis adjacent to each wheel.
- Do not operate the machine when wind conditions exceed 12.5 m/s (28 mph).
- This machine can be operated in nominal ambient temperatures of -20° C to 40° C (0° F to 104° F). Consult JLG to optimize operation outside of this temperature range.

Machine Inspection

- Do not operate this machine until the inspections and functional checks have been performed as specified in the Preparation and Inspection section of this manual.
- Do not operate this machine until it has been serviced and maintained according to the maintenance and

inspection requirements as specified in the machine's Service and Maintenance Manual.

- Ensure the footswitch and all other safety devices are operating properly. Modification of these devices is a safety violation.

⚠ WARNING

MODIFICATION OR ALTERATION OF AN AERIAL WORK PLATFORM SHALL BE MADE ONLY WITH PRIOR WRITTEN PERMISSION FROM THE MANUFACTURER

- Do not operate any machine on which the safety or instruction placards or decals are missing or illegible.
- Check the machine for modifications to original components. Ensure that any modifications have been approved by JLG.
- Avoid accumulation of debris on platform floor. Keep mud, oil, grease, and other slippery substances from footwear and platform deck.

1.3 OPERATION

General

- Do not use the machine for any purpose other than positioning personnel, their tools, and equipment.
- Before operation, the user must be familiar with the machine capabilities and operating characteristics of all functions.
- Never operate a malfunctioning machine. If a malfunctions occurs, shut down the machine. Remove the unit from service and notify the proper authorities.
- Do not remove, modify, or disable the footswitch or any other safety devices.
- Never slam a control switch or lever through neutral to an opposite direction. Always return switch to neutral and stop before moving the switch to the next function. Operate controls with slow and even pressure.
- Hydraulic cylinders should never be left at end of travel (fully extended or fully retracted) before shutdown or for long periods of time. Always "bump" control in opposite direction slightly when function reaches end of travel. This applies both to machines in operation or in the stowed position.
- Do not allow personnel to tamper with or operate the machine from the ground with personnel in the platform, except in an emergency.
- Do not carry materials directly on platform railing unless approved by JLG.
- When two or more persons are in the platform, the operator shall be responsible for all machine operations.
- Always ensure that power tools are properly stowed and never left hanging by their cord from the platform work area.
- When driving, always position boom over rear axle in line with the direction of travel. Remember, if boom is over the front axle, the direction of steer and drive will be opposite from normal operation.
- Do not assist a stuck or disabled machine by pushing, pulling, or by using boom functions. Assist only by pulling at the chassis tie-down lugs.
- Do not place boom or platform against any structure to steady the platform or to support the structure.
- Stow boom and shut off all power before leaving machine.

Trip and Fall Hazards

JLG Industries, Inc. requires that all persons in the platform wear a full body harness with a lanyard attached to an authorized lanyard anchorage point while operating this machine. For further information regarding fall protection requirements on JLG products, contact JLG Industries, Inc.

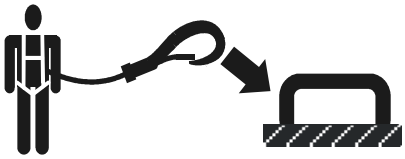

- Prior to operation, ensure all gates are fastened and secured in their proper position. Identify the designated lanyard anchorage point(s) at the platform and securely attach the lanyard. Attach only one (1) lanyard per lanyard anchorage point.

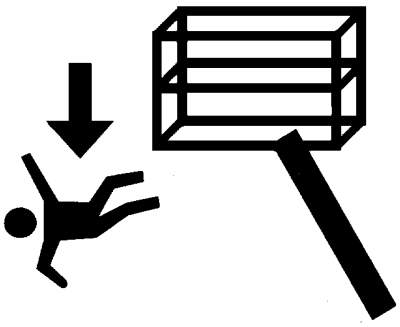

- Keep both feet firmly positioned on the platform floor at all times. Never position ladders, boxes, steps, planks, or similar items on unit to provide additional reach for any purpose.
- Never use the boom assembly to gain access to or leave the platform.
- Use extreme caution when entering or leaving platform. Ensure that the boom is fully lowered. Face the machine when entering or leaving the platform. Always maintain “three point contact” with the machine, using two hands and one foot or two feet and one hand at all times during entry and exit.
- Platform-to-structure transfers at elevated positions are discouraged. Where transfer is necessary, enter/exit through the gate only with the platform within 1 foot (0.3m) of a safe and secure structure. 100% tie-off is also required in this situation utilizing two lanyards. One lanyard must be attached to the platform with the second lanyard attached to the structure. The lanyard connected to the platform must not be disconnected until such time the transfer to the structure is safe and complete.
- Keep oil, mud, and slippery substances cleaned from footwear and the platform floor.

Electrocution Hazards

- This machine is not insulated and does not provide protection from contact with an electrically charged conductor.

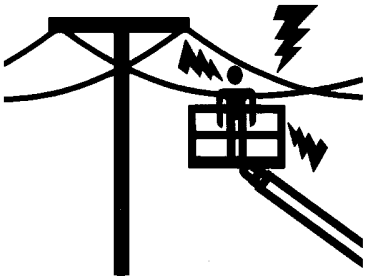

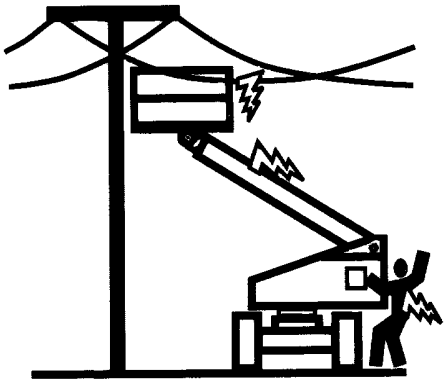

- Maintain safe clearance from electrical lines, apparatus, or any energized (exposed or insulated) parts in accordance with the Minimum Safe Approach Distance (MSAD) as specified in Table 1-2. Allow for machine movement and electrical line swaying.

Table 1-1.Minimum Safe Approach Distances (M.S.A.D.)

Voltage Range (Phase to Phase)	MINIMUM SAFE APPROACH DISTANCE in Feet (Meters)
0 to 300V	AVOID CONTACT
Over 300V to 50 KV	10 (3)
Over 50KV to 200 KV	15 (5)
Over 200 KV to 350 KV	20 (6)
Over 350 KV to 500 KV	25 (8)
Over 500 KV to 750 KV	35 (11)
Over 750 KV to 1000 KV	45 (14)
NOTE: This requirement shall apply except where employer, local or governmental regulations are more stringent.	

- Maintain a clearance of at least 10 ft (3m) between any part of the machine and its occupants, their tools, and their equipment from any electrical line or apparatus carrying up to 50,000 volts. One foot additional clearance is required for every additional 30,000 volts or less.

⚠ DANGER

DO NOT MANEUVER MACHINE OR PERSONNEL INSIDE PROHIBITED ZONE (MSAD). ASSUME ALL ELECTRICAL PARTS AND WIRING ARE ENERGIZED UNLESS KNOWN OTHERWISE.

Tipping Hazards

- Ensure that the ground conditions are adequate to support the maximum tire load indicated on the tire load decals located on the chassis adjacent to each wheel. Do not travel on unsupported surfaces.
- The user should be familiar with the driving surface before driving. Do not exceed the allowable sideslope and grade while driving.

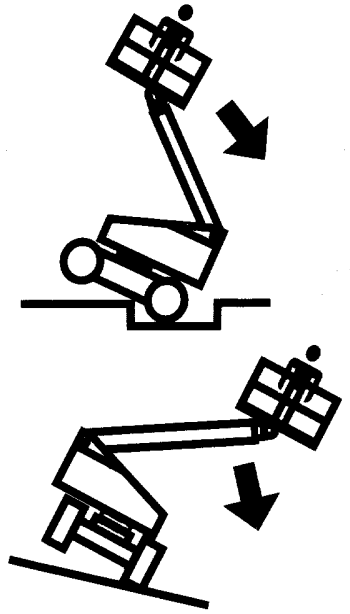

- Do not elevate platform or drive with platform elevated while on a sloping, uneven, or soft surface. Ensure machine is positioned on a firm, level and uniformly supported surface before elevating platform or driving with the platform in the elevated position.
- Before driving on floors, bridges, trucks, and other surfaces, check allowable capacity of the surfaces.
- Never exceed the maximum work load as specified on the platform. Distribute loads evenly on platform floor. Keep all loads within the confines of the platform, unless authorized by JLG.

- Keep the chassis of the machine a minimum distance of 0.6m (2 ft.) from holes, bumps, drop-offs, obstructions, debris, concealed holes, and other potential hazards at the ground level.
- Never push or pull the machine or other objects by telescoping or retracting the boom.
- Never attempt to use the machine as a crane. Do not tie-off machine to any adjacent structure. Never attach wire, cable, or any similar items to platform.
- Do not operate the machine when wind conditions exceed 12.5 m/s (28 mph).
- Do not cover the platform sides or carry large surface-area items in the platform when operating outdoors. The addition of such items increases the exposed wind area of the machine.
- Do not increase the platform size with unauthorized deck extensions or attachments.
- If boom assembly or platform is caught so that one or more wheels are off the ground, all persons must be removed before attempting to free the machine. Use cranes, forklift trucks, or other appropriate equipment to stabilize machine and remove personnel.

Crushing and Collision Hazards

- Approved head gear must be worn by all operating and ground personnel.
- Keep hands and limbs away from boom assembly during operation.
- Watch for obstructions around machine and overhead when driving. Check clearances above, on sides, and bottom of platform when lifting or lowering platform.

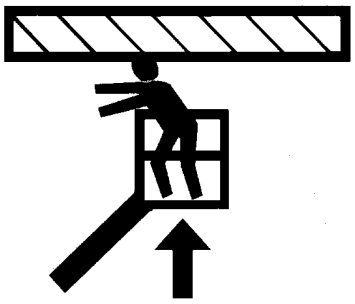

- During operation, keep all body parts inside platform railing.
- Use the boom functions, not the drive function, to position the platform close to obstacles.
- Always post a lookout when driving in areas where vision is obstructed.
- Keep non-operating personnel at least 1.8m (6 ft.) away from machine during all driving operations.
- Under all travel conditions, the operator must limit travel speed according to conditions of ground surface, congestion, visibility, slope, location of personnel, and other factors causing hazards of collision or injury to personnel.
- Be aware of stopping distances in all drive speeds. When driving in high speed, switch to low speed before stopping. Travel grades in low speed only.
- Do not use high speed drive in restricted or close quarters or when driving in reverse.
- Exercise extreme caution at all times to prevent obstacles from striking or interfering with operating controls and persons in the platform.
- Ensure that operators of other overhead and floor level machines are aware of the aerial work platform's presence. Disconnect power to overhead cranes. Barricade floor area if necessary.
- Avoid operating over ground personnel. Warn personnel not to work, stand, or walk under a raised boom or platform. Position barricades on floor as necessary.

1.4 TOWING, LIFTING, AND HAULING

- Never allow personnel in platform while towing, lifting, or hauling.
- This machine should not be towed, except in the event of emergency, malfunction, power failure, or loading/unloading. Refer to the Emergency Procedures section of this manual for emergency towing procedures.
- Ensure boom is in the stowed position and the turntable locked prior to towing, lifting or hauling. The platform must be completely empty of tools.
- When lifting machine, lift only at designated areas of the machine. Lift with lifting equipment of adequate capacity.
- Refer to the Machine Operation section of this manual for lifting information.

1.5 MAINTENANCE

General

This section contains general safety precautions which must be observed during maintenance of this machine. Additional precautions to be observed during machine maintenance are inserted at the appropriate points in this manual and in the Service and Maintenance Manual. It is of utmost importance that maintenance personnel pay strict attention to these precautions to avoid possible injury to personnel or damage to the machine or property. A maintenance program must be established by a qualified person and must be followed to ensure that the machine is safe.

Maintenance Hazards

- Shut off power to all controls and ensure that all operating systems are secured from inadvertent motion prior to performing any adjustments or repairs.
- Never work under an elevated platform until it has been fully lowered to the full down position, if possible, or otherwise supported and restrained from movement with appropriate safety props, blocking, or overhead supports.
- Always relieve hydraulic pressure from all hydraulic circuits before loosening or removing hydraulic components.
- Always disconnect batteries when servicing electrical components or when performing welding on the machine.
- Shut down the engine (if equipped) while fuel tanks are being filled.
- Ensure replacement parts or components are identical or equivalent to original parts or components.
- Never attempt to move heavy parts without the aid of a mechanical device. Do not allow heavy objects to rest in an unstable position. Ensure adequate support is provided when raising components of the machine.
- Remove all rings, watches, and jewelry when performing any maintenance. Do not wear loose fitting clothing or long hair unrestrained which may become caught or entangled in equipment.
- Use only clean approved non-flammable cleaning solvents.
- Never alter, remove, or substitute any items such as counterweights, tires, batteries, platforms or other items that may reduce or affect the overall weight or stability of the machine. Reference the Service and Maintenance Manual for the weights of critical stability items.

⚠ WARNING

MODIFICATION OR ALTERATION OF AN AERIAL WORK PLATFORM SHALL BE MADE ONLY WITH PRIOR WRITTEN PERMISSION FROM THE MANUFACTURER

Battery Hazards

- Always disconnect batteries when servicing electrical components or when performing welding on the machine.
- Do not allow smoking, open flame, or sparks near battery during charging or servicing.
- Do not contact tools or other metal objects across the battery terminals.
- Always wear hand, eye, and face protection when servicing batteries. Ensure that battery acid does not come in contact with skin or clothing.

⚠ WARNING

BATTERY FLUID IS HIGHLY CORROSIVE. AVOID CONTACT WITH SKIN AND CLOTHING AT ALL TIMES. IMMEDIATELY RINSE ANY CONTACTED AREA WITH CLEAN WATER AND SEEK MEDICAL ATTENTION.

- Charge batteries only in a well ventilated area.
- Avoid overfilling the battery fluid level. Add distilled water to batteries only after the batteries are fully charged.

SECTION 2. PREPARATION AND INSPECTION

2.1 GENERAL

This section provides the necessary information needed by those personnel that are responsible to place the machine in operation readiness, and lists checks that are performed prior to use of the machine. It is important that the information contained in this section be read and understood before any attempt is made to operate the machine. Ensure that all the necessary inspections have been completed successfully before placing the machine into service. These procedures will aid in obtaining maximum service life and safe operation.

IMPORTANT

SINCE THE MACHINE MANUFACTURER HAS NO DIRECT CONTROL OVER THE FIELD INSPECTION AND MAINTENANCE, SAFETY IS THE RESPONSIBILITY OF THE OWNER/OPERATOR.

2.2 PREPARATION FOR USE

Before a new machine is put into operation it must be carefully inspected for any evidence of damage resulting from shipment and inspected periodically thereafter, as outlined in Delivery and Frequent Inspection (see Section 2.3). During initial start-up and run, the unit should be thoroughly checked for hydraulic leaks. A check of all components should be made to assure their security.

All preparation necessary to place the machine in operation readiness status is the responsibility of management personnel. Preparation requires good common sense, (i.e. telescope works smoothly and brakes operate properly) coupled with a series of visual inspections. The mandatory requirements are given in the Daily Walk Around Inspection (see Section 2.4).

It should be assured that the items appearing in the Delivery and Frequent Inspection and Functional Check are complied with prior to putting the machine into service.

2.3 DELIVERY AND FREQUENT INSPECTION

The following checklist provides a systematic inspection to assist in detecting defective, damaged, or improperly installed parts. The checklist denotes the items to be inspected and conditions to examine.

Frequent inspection shall be performed every 3 months or 150 hours whichever comes first, or more often when required by environment, severity, and frequency of usage.

Undercarriage

1. Check the carrier rollers, the track rollers, and the idler wheels for possible leakage.
2. Check the surface of the track, the carrier rollers, the track rollers, the idler wheels, the track shoes, and the drive sprockets. Look for signs of wear and loose mounting bolts.
3. Listen for any abnormal noises while you are moving slowly in an open area.
4. If abnormal wear exists or abnormal noises or leaks are found, consult your JLG dealer.
5. Check oil level in final drive (drive hub) by removing plug on the side and feeling for oil level. (Contact Service Personnel for assistance if needed.)

NOTE: *Final Drive (drive hub) should be one-half full of lubricant.*

Turntable

1. Check turntable and turntable lock for damage, loose or missing parts, and security. Check swing drive hub, hydraulic motor, and brake for damage, loose or missing parts, hydraulic lines and component housings for evidence of leakage; pinion for proper mesh with swing gear.
2. Check swing bearing for damage, wear, lubrication and loose or missing bearing bolts.
3. Check solenoid valves and hydraulic lines for damage, leakage, security and electrical connections for tightness and evidence of corrosion.
4. Check ground controls for damage, loose or missing parts, security, electrical connections for evidence of corrosion and tightness and wiring for insulation damage. Assure that all switches function properly.
5. Check manual descent valves for visible damage, evidence of leakage and security. Assure that valves function properly.
6. Check battery for damage, loose or missing vent caps, electrical connections for tightness, and evidence of corrosion, hold-down brackets for tightness, and electrolyte for proper water level. Add only clean distilled water to battery.
7. Check engine tray pivot assembly for damage, loose or missing parts, and security.
8. Check engine and accessories for damage, loose or missing parts, leakage and security. Check throttle solenoid and linkage for damage, electrical connections for tightness, and evidence of corrosion and wiring for insulation damage.
9. Check fuel lines for damage, leakage and security.
10. Check all access doors for damage, proper operation of latches, props and security.
11. Check fuel tank for damage, leakage and filler cap for security.
12. Check hydraulic reservoir and hydraulic lines for damage, leakage and security.

NOTE: *JLG recommends replacing the hydraulic filter element after the first 50 hours of operation and then every 300 hours thereafter, unless system indicator require earlier replacement.*

13. Check all pin and shaft retaining hardware for security and wear.
14. Check all electrical cables for defects, damage, loose or corroded connections.

Boom

1. Check all pin and shaft retaining hardware for security and wear.
2. Check hydraulic lines, electrical cable and track assemblies for damage, missing parts and security.
3. Check main boom lift cylinder and cross pins and hydraulic lines for damage, wear, leakage and security.
4. Check main boom pivot pins for damage, wear, and security.
5. Check main boom for damage, missing parts and security.
6. Check main boom wear pads for damage, wear and security.
7. Check main boom telescope cylinder and cross pins and hydraulic lines for damage, wear, leakage and security.
8. Check platform leveling cylinder and cross pins and hydraulic lines for damage, wear, leakage and security.
9. Check boom/platform pivot pin for damage, wear and security.
10. Check articulating jib boom cylinder and pins and hydraulic lines for damage, wear and security.
11. Check horizontal and capacity limit switches (mounted on turntable) for security of mounting, damage to switch arms and rollers; and for debris.
12. Check boom cables and cable attach hardware for damage, wear and security.

Platform

1. Check platform and control console for damage, loose or missing parts, and security.
2. Check control switches and levers for damage, loose or missing parts and security. Assure that levers function properly.
3. Check control switches, levers and electrical connections for tightness and evidence of corrosion, and wiring for defects and chafing damage. Assure that switches function properly.
4. Check access gate hinges and latch for proper operation, damage and security.
5. Check platform rotator mechanism for proper operation, damage, security. Check hydraulic lines for leakage, damage and security.

NOTE: *Check all DANGER, WARNING, CAUTION and INSTRUCTION placards for legibility and security on the entire machine.*

Torque Requirements

The Torque Chart (Figure 2-9.) consists of standard torque values based on bolt diameter and grade, also specifying dry and wet torque values in accordance with recommended shop practices. This chart is provided as an aid to the operator in the event he/she notices a condition that requires prompt attention during the walk-around inspection or during operation, until the proper service personnel can be notified. The Service and Maintenance manual provides specific torque values and periodic maintenance procedures with a listing of individual components. Utilizing this Torque Chart in conjunction with the preventive maintenance section in the Service and Maintenance manual will enhance safety, reliability, and performance of the machine.

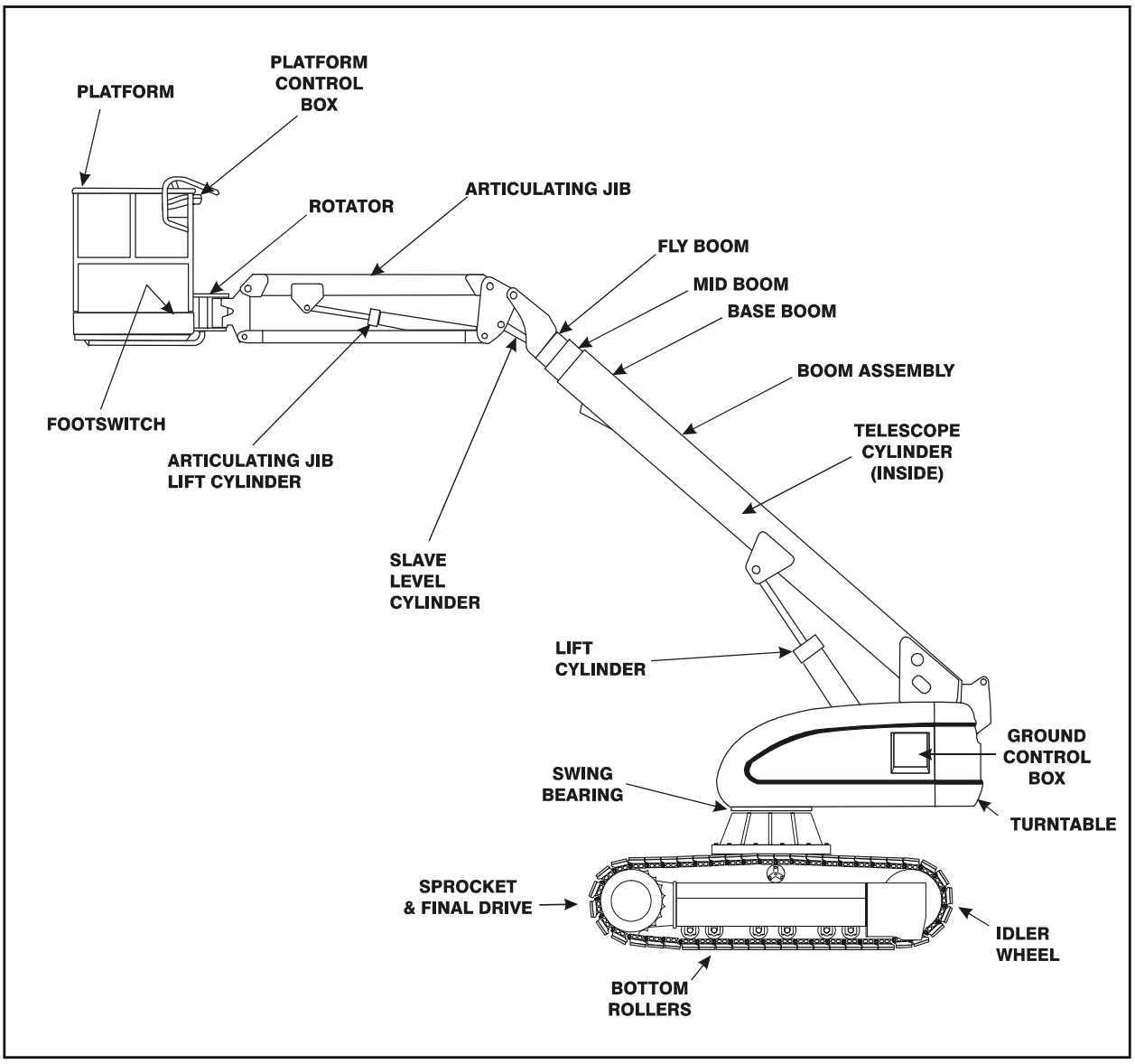

Figure 2-1. Machine Nomenclature - 660SJC

2.4 DAILY WALK-AROUND INSPECTION

It is the operators responsibility to inspect the machine before the start of each workday. It is recommended that each operator inspect the machine before operation, even if the machine has already been put into service under another operator. This Daily Walk-Around Inspection is the preferred method of inspection. (Figure 2-2.)

In addition to the Daily Walk-Around Inspection, be sure to include the following as part of the daily inspection:

1. Overall cleanliness.

   Check all standing surfaces for oil, fuel and hydraulic oil spillage and foreign objects. Ensure overall cleanliness.

2. Placards.

   Keep all information and operating placards clean and unobstructed. Cover when spray painting or shot blasting to protect legibility.

3. Operator's and Safety Manual.

   Ensure a copy of this manual is enclosed in the manual storage box.

4. Machine Log.

   Ensure a machine operating record or log is kept, check to see that it is current and that no entries have been left uncleared, leaving machine in an unsafe condition for operation.

5. Start each day with a full fuel tank.

⚠ WARNING

TO AVOID INJURY, DO NOT OPERATE A MACHINE UNTIL ALL MALFUNCTIONS HAVE BEEN CORRECTED. USE OF A MALFUNCTIONING MACHINE IS A SAFETY VIOLATION.

TO AVOID POSSIBLE INJURY, BE SURE MACHINE POWER IS "OFF" DURING WALK-AROUND INSPECTION.

NOTE: *Check boom horizontal limit switch for proper operation and security, both visually and manually. Switch must shut down high engine and high drive speed when boom is raised above horizontal:*

6. Check platform footswitch for proper operation. Switch must be released to start engine and depressed to operate machine.

7. Check that drive brakes hold when machine is driven up a grade and stopped.

NOTE: *On new machines, those recently overhauled, or after changing hydraulic oil, operate all systems a minimum of two complete cycles and recheck oil level in reservoir.*

8. Assure that all items requiring lubrication are serviced. Refer to Lubrication Chart, Table 2-1, for specific requirements.

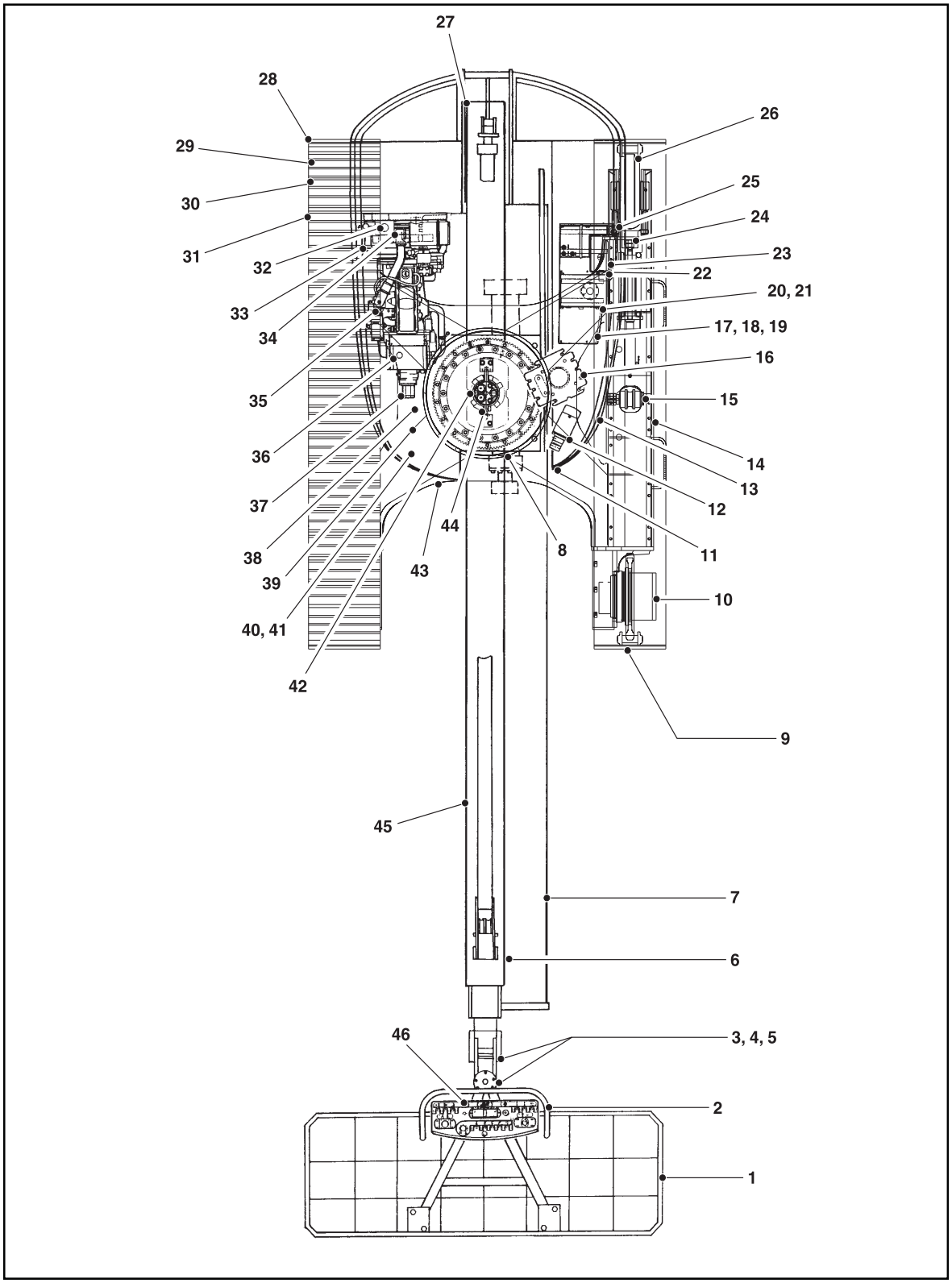

Figure 2-2. Daily Walk-Around Inspection Diagram

GENERAL

Begin the “Walk-Around Inspection” at Item 1, as noted on the diagram. Continue to the right (counterclockwise viewed from top) checking each item in sequence for the conditions listed in the “Walk-Around Inspection Checklist”.

⚠ WARNING

TO AVOID INJURY, DO NOT OPERATE A MACHINE UNTIL ALL MALFUNCTIONS HAVE BEEN CORRECTED. USE OF A MALFUNCTIONING MACHINE IS A SAFETY VIOLATION. TO AVOID POSSIBLE INJURY, BE SURE MACHINE POWER IS “OFF” DURING WALK-AROUND INSPECTION.

NOTE: *Do not overlook visual inspection of chassis underside. Checking this area often results in discovery of conditions which could cause extensive machine damage.*

1. Platform Assembly - No loose or missing parts, no visible damage. Lockbolts in place. Footswitch in good working order, not modified, disabled or blocked. Check area of fly boom nose section above and under platform slave level cylinder for accumulation of foreign material. Remove any foreign material present.
2. Platform Control Console - Switches and levers return to neutral and are properly secured, no loose or missing parts, no visible damage, decals/placards secure and legible, control marking legible.
3. Rotator - Properly secured, no visible damage, no evidence of leakage.
4. Rotator Motion Control Valve - No visible damage, no evidence of leakage, no unsupported hoses, no damaged wires.
5. Articulating Jib Boom - Properly secured, no visible damage, no loose or missing parts. (If Equipped)
6. Dual Capacity Limit Switch (if equipped), Transport Position Limit Switch - Properly secured, no damage to the switch, arm free to move, and free from dirt and grease.
7. Power Track - No loose, damaged or missing parts, no visible damage.
8. Turntable Bearing and Pinion - No loose or missing hardware; no visible damage, evidence of proper lubrication. No evidence of loose bolts or looseness between bearing and structure.
9. Right Track - Properly secured plates, no loose or missing track bolts, no dislocation of the track pins, no visible damage. Proper tension.
10. Final Drive, Right Rear - No visible damage, no evidence of leakage.
11. Turntable Lock - Operable; No missing parts, no visible damage.
12. Auxiliary Power Pump - No loose or missing parts, no evidence of leakage, no damage wires.
13. LP Gas Tank - Brackets, hose and fittings secure; no visible damage, no missing parts. (If Equipped)
14. Bottom Rollers, Right Side - No loose or missing bolts, no evidence of leakage, no visible damage.
15. Track Carrier Roller, Right Side - No loose or missing bolts, no evidence of leakage, no visible damage.
16. Swing Drive Motor and Brake - No visible damage, no evidence of leakage.
17. Control Valve (Tank Compartment) - No visible damage, no evidence of leakage, no unsupported wires or hoses, no damaged wires.
18. Manual Descent - No evidence of leakage, no visible damage.
19. Hydraulic Oil Return Filter Housing secure; no visible damage; no evidence of leakage.
20. Hydraulic Oil Supply - Recommended oil level sight gauge. (Check level with cold oil, systems shut down, machine in stowed position) Cap in place and secure.
21. Hydraulic Oil Breather - Element in place, not clogged, no sign of overflow.
22. Door and Latches, Right Side - Hood door and latches in working condition, properly secured, no loose or missing parts.
23. Ground Controls - Switches operable, no visible damage, decals secure and legible.
24. Right Tension Mechanism - No visible leakage, no visible damage.
25. Fuel Supply - Fuel filler cap secure. Tank - no visible damage; no evidence of leaks.
26. Idler, Right Front - No visible damage, no evidence of leakage.

Figure 2-3. Daily Walkaround Inspection Points -Sheet 1

27. Dual Capacity Limit Switch - Properly secured, no damage to the switch, arm free to move, and free from dirt and grease.
28. Left Track Belt - No excessive damage. No cuts or delamination of the carcass. Proper tension.
29. Idler, Right Front - No visible damage, no evidence of leakage.
30. Left Tension Mechanism - No visible leakage, no visible damage.
31. Bottom Rollers, Left Side - No loose or missing bolts, no evidence of leakage, no visible damage.
32. Battery - Proper electrolyte levels; cables tight, no visible damage or corrosion.
33. Door and Latches, Left Side - Hood door and latches in working condition, properly secured, no loose or missing parts.
34. Engine Air Filter - No loose or missing parts; no visible damage; element clean.
35. Engine Oil Supply - Full mark on dipstick; filler cap secure.
36. Muffler and Exhaust System - Properly secured, no evidence of leakage
37. Hydraulic Pump - No loose or missing parts, no evidence of leakage.
38. Engine Tray Pivot - No loose or missing parts, no visible damage.
39. Hydraulic Oil Medium Pressure Filter Housing - Housing secure; no visible damage; no evidence of leakage.
40. LP Gas Tank - Brackets, hose and fittings secure; no visible damage, no missing parts. (If Equipped)
41. Flow Valves - No visible damage, no evidence of leakage, no unsupported wires or hoses, no damaged wires.
42. Horizontal Cutoff Limit Switch - (High Engine/High Drive Cut-off Switch) properly secured, no damage to the switch, arm free to move, and free from dirt and grease.
43. Frame - No visible damage, no loose or missing hardware (top and underside).
44. Hydraulic Swivel - No loose or missing parts, no evidence of leakage.
45. Main Boom Sections - No visible damage; wear pads secure. All cylinders - rod end shafts and barrel-end shafts properly secured; evidence of proper lubrication.
46. Platform Pivot Pin - Properly secured; no evidence of damage.

Figure 2-4. Daily Walkaround Inspection Points - Sheet 2

2.5 DAILY FUNCTIONAL CHECK

A functional check of all systems should be performed, once the walk-around inspection is complete, in an area free of overhead and ground level obstructions. First, using the ground controls, check all functions controlled by the ground controls. Next, using the platform controls, check all functions controlled by the platform controls.

WARNING

TO AVOID SERIOUS INJURY, DO NOT OPERATE MACHINE IF ANY CONTROL LEVERS OR TOGGLE SWITCHES CONTROLLING PLATFORM MOVEMENTS DO NOT RETURN TO THE OFF OR NEUTRAL POSITION WHEN RELEASED.

TO AVOID COLLISION AND INJURY IF PLATFORM DOES NOT STOP WHEN A CONTROL SWITCH OR LEVER IS RELEASED, REMOVE FOOT FROM FOOTSWITCH OR USE EMERGENCY STOP TO STOP THE MACHINE.

NOTE: *Perform checks from ground controls first, then from platform controls.*

1. Operate machine from ground control.

NOTE: *For adjustments see Service Manual, Limit Switch Adjustments.*

2. Check elevation limit switch as follows:
   a. Lift boom up to 2 degrees to 7 degrees above horizontal. The switch should activate at this point.
   b. Lift boom down to 2.5 degrees to 7.5 degrees below horizontal. The switch should reset at this point.

NOTE: *CE spec machines are single capacity (230kg) only.*

3. Check capacity limit switch (if equipped) as follows:

   Boom Length Switch.

   a. Raise boom to horizontal (place angle indicator on base boom between boom pivot pin and lift cylinder attach pin).
   b. Telescope boom out until 230kg. light comes on (may need to used auxiliary power to position boom correctly).
   c. Mark wear pad location on the fly and mid booms.
   d. Telescope boom out to full extension.
   e. Measure from the mark on the fly boom to the wear pad and measure from mark on the mid boom to the wear pad.
   f. Add These two numbers together (they should be approximately equal) they should measure 348 to 353 cm.

   Boom Angle Switch.

   a. Telescope boom to full extension.
   b. Lift boom up until 455 kg. light comes on.
   c. Lift boom down using auxiliary power until 500 lb. light comes on. Boom angle must be 45 degrees to 50 degrees (place angle indicator on base boom between boom pivot pin and lift cylinder attach pin).
   d. Lift boom up until 455 kg. light comes on. Boom angle should be 55 degrees to 64 degrees.

NOTE: *If limit switch settings need to be changed, you will need to recheck that the 230 kg. light comes on at 45 degrees to 50 degrees when lifting down.*

4. Drive Disable Switch (Refer to Figure 2-5., Drive Function Operating Range Diagrams).
   a. Telescope the boom out over 40 ft. (12.2 m).
   b. Manually tilt the tilt sensor.
   c. Drive Disable Indicator Light should come on.
   d. Retract the boom and elevate to at least 55°.
   e. Manually tilt the tilt sensor.
   f. The Drive Disable Indicator Light should come on again.
5. Raise main boom, extend and retract telescope. Check for delayed movement of fly section, indicating loose cables.

NOTE: *Turntable lock is on turntable facing platform. To disengage lock, pull snap pin from lock pin, lift lock pin up to unlock turntable. Return snap pin to lock pin to hold lock pin in the disengaged position. Reverse procedure to engage turntable lock.*

6. Swing turntable to LEFT and RIGHT a minimum of 45 degrees. Check for smooth motion.
7. With the aid of an assistant to monitor the CHASSIS OUT OF LEVEL indicator light on the platform control console, manually activate the indicator light by compressing any one of the three tilt indicator mounting springs. If the light does not illuminate, shut down machine and contact a qualified service technician before continuing operation.
8. Check that platform automatic self-leveling system functions properly during raising and lowering of the boom.
9. Check platform level adjustment system for proper operation.

10. Check platform rotator for smooth operation and assure platform will rotate 90 degrees in both directions from centerline of boom.
11. Drive forward and reverse; check for proper operation.
12. Steer left and right; check for proper operation.
13. Raise and lower Articulating Jib Boom. Check for smooth operation.
14. Footswitch.

⚠ IMPORTANT

FOOTSWITCH MUST BE ADJUSTED SO THAT FUNCTIONS WILL OPERATE WHEN PEDAL IS APPROXIMATELY AT ITS CENTER OF TRAVEL. IF SWITCH OPERATES WITHIN LAST 6.3 MM OF TRAVEL, TOP OR BOTTOM, IT SHOULD BE ADJUSTED.

a. Activate hydraulic system. By depressing footswitch. Operate MAIN TELESCOPE and hold control. Remove foot from footswitch, motion should stop. If it does not, shut down machine and contact a certified JLG service technician.
b. With footswitch depressed, operate LIFT and hold control. Remove foot from footswitch, motion should stop. If it does not, shut down machine and contact a certified JLG service technician.
c. With engine power shut down, depress the footswitch. Attempt to start engine. Engine should not attempt to start when footswitch is depressed. If starter engages or engine turns over, shut down machine and contact a certified JLG service technician.

15. Auxiliary Power.

    Operate each function control switch (e.g. TELE, LIFT and SWING - S Models) (e.g. MAIN TELE, MAIN LIFT, TOWER LIFT and SWING - A Models) to assure that they function in both directions using auxiliary power instead of engine power.

16. Ground Controls.

    Place GROUND/PLATFORM SELECT switch to GROUND. Start engine. Platform controls should not operate.

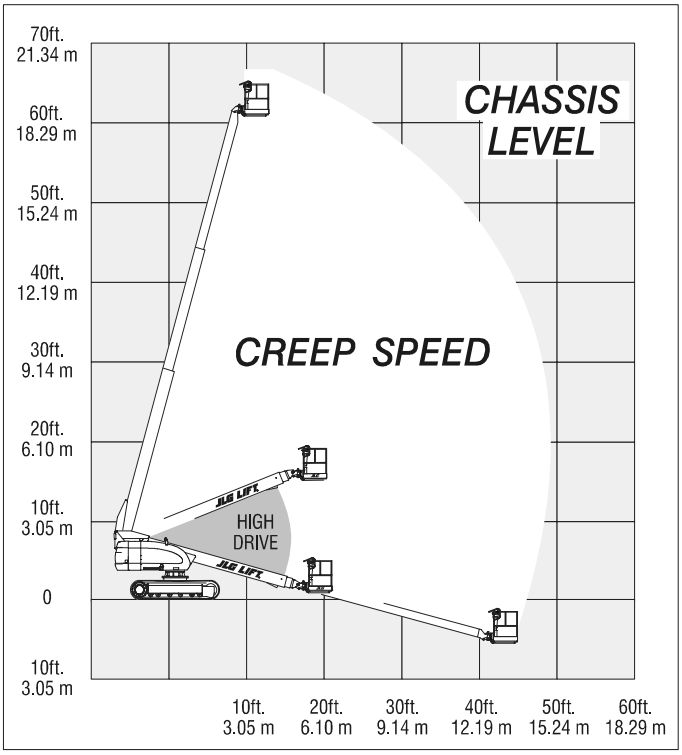

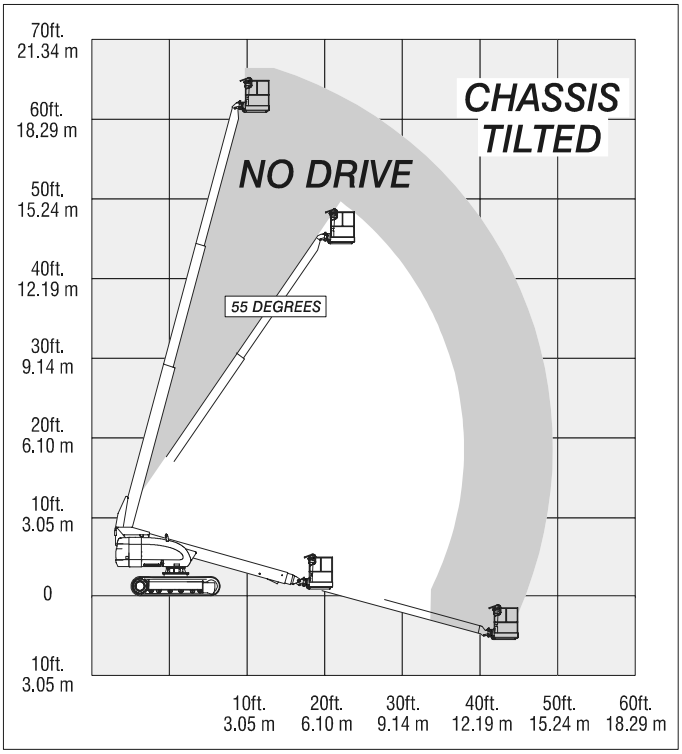

NOTE: In the Transport Mode, High Drive will be disabled above 10° elevation or past 3 feet (1m) of boom extension.

Figure 2-5. Drive Function Operating Range Diagrams

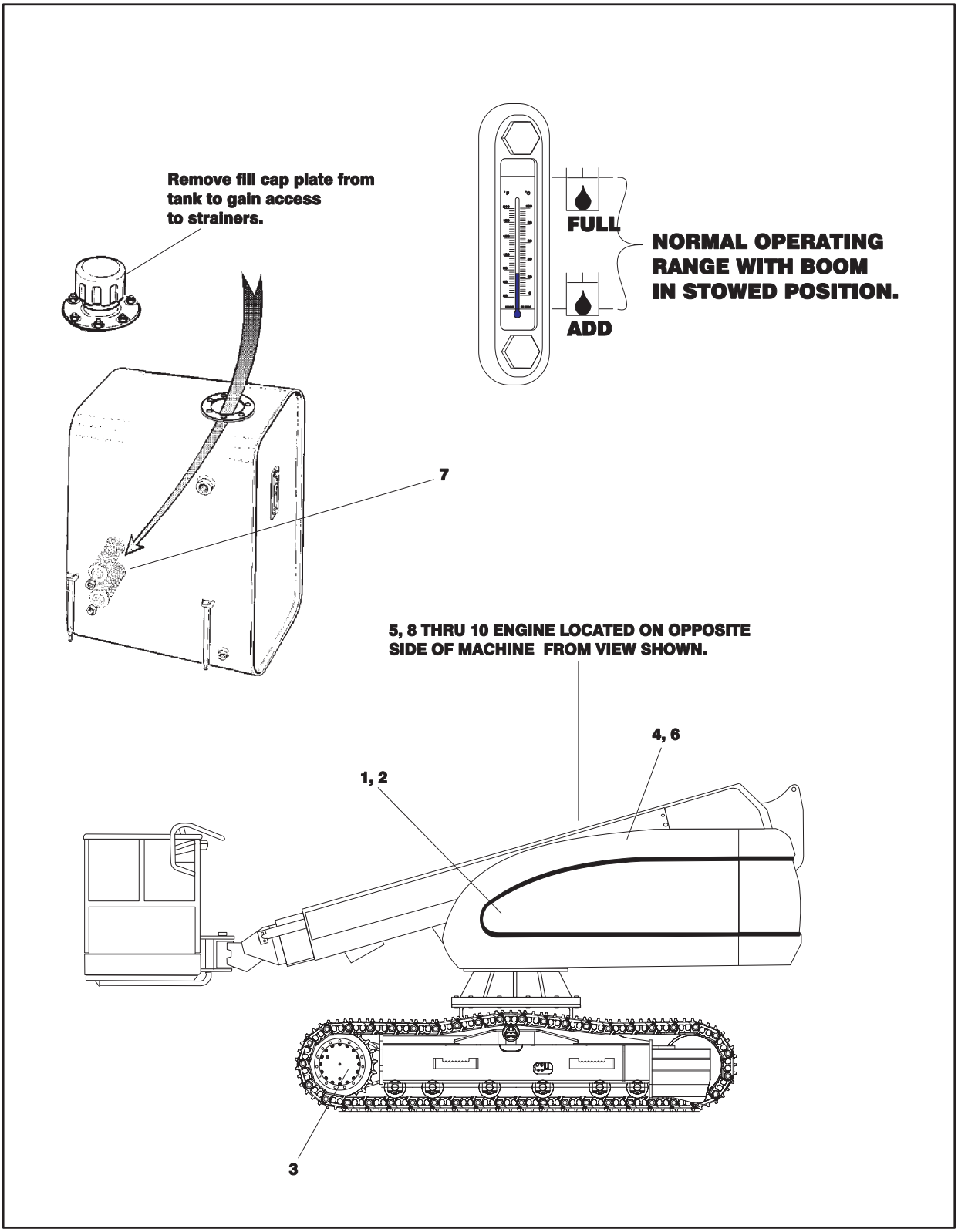

Figure 2-6. Lubrication Point Location

Table 2-1. Lubrication Chart

	Components	Number/Type Lube Points	Capacity	Lube	Interval		Hours		Comments
					3 Months 150 hrs	6 Months 300 hrs	1 Year 600 hrs	2 Years 1200 hrs	
Lubrication									
1	Swing Bearing	2 Grease Fittings	A/R	MPG	X				Remote Access
2	Swing Drive Hub	Level/Fill Plug	0.5 liters (1/2 Full)	EPGL	X				Check level every 150 hrs/change 1200 hours
3	Final Drive Hub	Level/Fill Plug	7.9 liters (1/2 Full)	EPGL	X				Check level every 150 hrs/change 1200 hours
4	Hydraulic Return Filter	N/A	N/A	N/A		X			Change after first 50 hrs. and every 300 hrs. thereafter or as indicated by Condition Indicator.
5	Hydraulic Charge Filter	N/A	N/A	N/A		X			Change after first 50 hrs. and every 300 hrs. thereafter or as indicated by Condition Indicator.
6	Hydraulic Oil	Fill Cap	115.8 liters Tank 123.8 liters System	HO				X	Check level daily/change 1200 hours
7	Suction Strainers (in tank)	2	N/A	N/A				X	Remove and clean at time of hydraulic oil change.
Engines									
8	Oil Change w/Filter - Deutz	Fill Cap/Spin-on Element	10.4 liters Crankcase **4.7 liters Cooler	EO			X		Check level daily/Change in accordance with engine manual.
9	Fuel Filter - Deutz	Replaceable Element	N/A	N/A			X		
10	Air Filter - Deutz	Replaceable Element	N/A	N/A		X			Or as indicated by Condition Indicator.

NOTES:		KEY TO LUBRICANTS	
Lubrication intervals are based on machine operation under normal conditions. For machines used in multi shift operations and/or exposed to hostile environments or conditions, lubrication frequencies must be increased accordingly.	** When changing oil in the Deutz oil cooled engine, drain both the crankcase and the cooler. When refilling it is acceptable to overfill the crankcase (15.1 liters., capacity of both crankcase and cooler combined). Start engine, allow the engine to run until the thermostat opens (approximately 105 degrees C) cooler will fill up within minutes; shut down and wait for approximately two minutes. Check oil level, fill oil to max marking on the dipstick.	EO EPGL HO MPG	Engine Oil Extreme Pressure Gear Lube Hydraulic Fluid (Mobil #424 or equivalent) Multi-Purpose Grease

2.6 BATTERY MAINTENANCE

⚠ WARNING

TO AVOID INJURY FROM AN EXPLOSION, DO NOT SMOKE OR ALLOW SPARKS OR A FLAME NEAR BATTERY DURING SERVICING.

Battery Maintenance

1. The battery is maintenance free except for occasional battery terminal cleaning, as noted in the following.
2. Remove battery cables from each battery post one at a time, negative first. Clean cables with acid neutralizing solution (e.g. baking soda and water or ammonia) and wire brush. Replace cables and/or cable clamp bolts as required.
3. Clean battery post with wire brush then re-connect cable to post. Coat non-contact surfaces with mineral grease or petroleum jelly (Vaseline).
4. When all cables and terminal posts have been cleaned, ensure all cables are properly positioned and are not pinched. Close battery compartment cover.
5. Machine is provided with a jump start stud, located on the battery tie down bracket. (See Diagram Below)

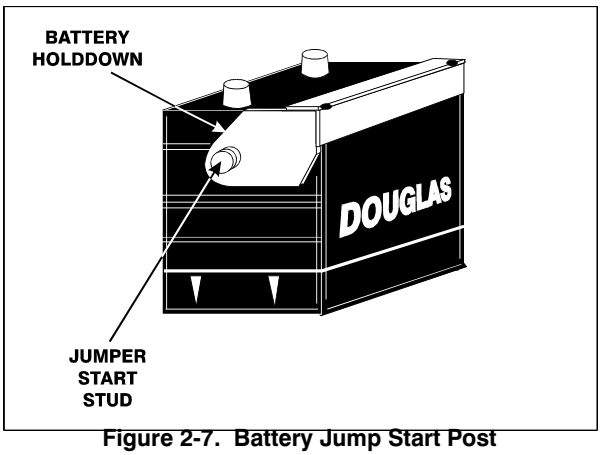

Figure 2-7. Battery Jump Start Post

2.7 TRACK ADJUSTMENT - ADJUST

⚠ WARNING

PERSONAL INJURY OR DEATH CAN RESULT FROM GREASE UNDER PRESSURE.

GREASE COMING OUT OF THE RELIEF VALVE UNDER PRESSURE CAN PENETRATE THE BODY CAUSING INJURY OR DEATH.

DO NOT WATCH THE RELIEF VALVE TO SEE IF GREASE IS ESCAPING. WATCH THE TRACK OR TRACK ADJUSTMENT CYLINDER TO SEE IF THE TRACK IS BEING LOOSENED.

LOOSEN THE RELIEF VALVE ONE TURN ONLY.

IF TRACK DOES NOT LOOSEN, CLOSE THE RELIEF VALVE AND CONTACT YOUR JLG DEALER.

NOTE: *Keeping the track properly adjusted will increase the service life of the track and drive components.*

The track tension must be set according to the current operating conditions. Keep the track as slack as possible if the soil is heavy.
Before adjusting the track, ensure the machine is on firm, level ground.

Make sure there are no objects under the tracks which would make the adjustment measurements inaccurate.

NOTE: *For accurate measurements, the machine should be driven forward before taking measurements.*

Make sure the tracks are positioned properly on the track carrier roller for accurate measurements.Refer to Figure 2-8., Track Orientation.

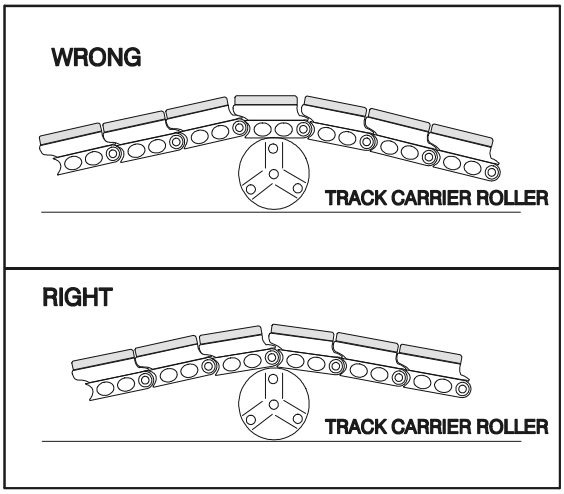

Figure 2-8. Track Orientation

Measuring Track Tension

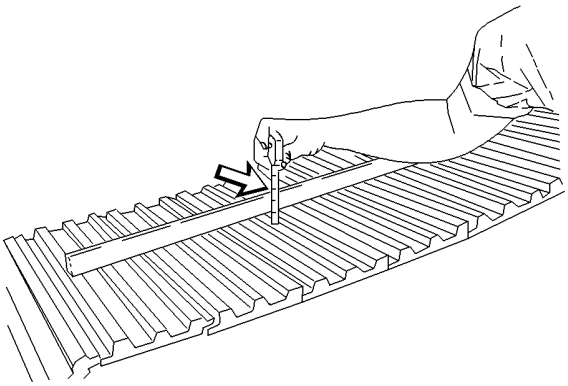

1. Place a straight edge on the tracks. The straight edge should be long enough to reach from the idler to the carrier roller.
2. Measure the maximum amount of sag in the track. The sag is measured from the highest point of the track grouser to the bottom of the edge. A track that is properly adjusted will have a slack of 40 to 55 mm (1 5/8 to 2 1/8 inch).

Tightening the Track

Wipe the fitting before you add grease.

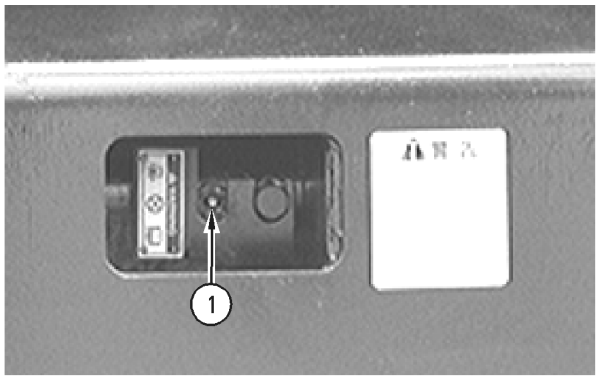

1. Add grease through valve fitting (1) until the correct track tension is reached.
2. Operate the machine back and forth in order to equalize the pressure.
3. Check the amount of sag. Adjust the track, as needed.

Loosening the Track

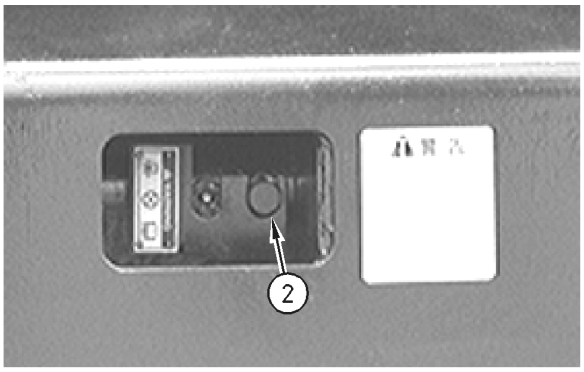

1. Loosen relief valve (2) Carefully until the track begins to loosen. One turn should be the maximum.
2. Tighten relief valve (2) to 34 N m (25 lb ft) when the desired track tension is reached.
3. Operate the machine back and forth in order to equalize the pressure.
4. Check the amount of sag. Adjust the track, as needed.

If the correct adjustment cannot be achieved, Consult your JLG dealer.

2.8 FINAL DRIVE OIL LEVEL CHECK

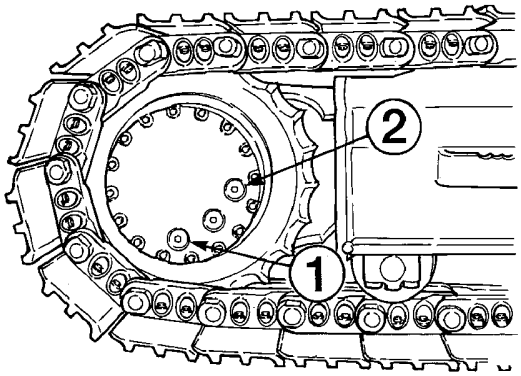

1. Position one final drive so that oil drain plug (1) is at the bottom.
2. Remove oil level plug (2).
3. Check the oil level. The oil should be near the bottom of the level plug opening.
4. Add oil through the level plug opening, if necessary.

⚠ CAUTION

OVERFILLING THE FINAL DRIVE WILL CAUSE THE SEALS ON THE TRAVEL MOTOR TO ALLOW HYDRAULIC OIL OR WATER TO ENTER THE FINAL DRIVE. THIS MAY CONTAMINATE THE FINAL DRIVE.

5. Clean oil level plug (2). Inspect the O-ring seal. Replace the O-ring seal if the O-ring seal is worn or damaged.
6. Install oil level plug (2).
7. Repeat the procedure for the other final drive.

SIZE	THD	BOLT DIA. (CM)	THREAD STRESS AREA (SQ. CM)	VALUES FOR ZINC PLATED BOLTS ONLY										UNPLATED CAP SCREWS	
				SAE GRADE 5 BOLTS & GRADE 2 NUTS					SAE GRADE 8 BOLTS & GRADE 8 NUTS					UNBRAKO 1960 SERIES SOCKET HEAD CAP SCREW WITH LOC-WEL PATCH	
				CLAMP LOAD (KG)	TORQUE (DRY OR LOC. 263) NM	TORQUE (LUB.) NM	TORQUE (LOCTITE 262) NM	TORQUE (LOCTITE 242 OR 271) NM	CLAMP LOAD (KG)	TORQUE (DRY OR LOC. 263) NM	TORQUE (LUB.) NM	TORQUE (LOCTITE 262) NM	TORQUE (LOCTITE 242 OR 271) NM	CLAMP LOAD (KG)	TORQUE (as received) NM
4	40	0.2845	0.0153	172	1	1	—	—	245	2	1	—	—	—	—
	48		0.0168	191	1	1	—	—	272	2	1	—	—	—	—
6	32	0.3505	0.0232	263	2	2	—	—	372	3	2	—	—	—	—
	40		0.0258	277	2	2	—	—	417	3	2	—	—	—	—
8	32	0.4166	0.0356	408	4	3	—	—	572	5	4	—	—	—	—
	36		0.0374	426	4	3	—	—	599	5	4	—	—	—	—
10	24	0.4826	0.0445	508	5	4	—	—	717	7	5	—	—	—	—
	32		0.0508	583	6	4	—	—	817	8	6	—	—	—	—
1/4	20	0.6350	0.0808	916	11	9	—	12	1297	16	12	—	18	1442	18
	28		0.0925	1052	14	10	—	16	1488	19	14	—	21	1651	19
5/16	18	0.7938	0.1331	1515	23	18	22	26	2141	34	25	30	41	2377	34
	24		0.1473	1678	26	19	23	29	2821	34	27	34	41	2631	37
3/8	16	0.9525	0.1969	2241	41	31	38	48	3175	61	48	54	68	3493	61
	24		0.2230	2540	48	34	43	54	3583	68	48	61	75	3983	68
7/16	14	1.1112	0.2700	3085	68	48	61	75	4332	95	75	85	109	4822	95
	20		0.3015	3425	75	68	68	81	4854	109	81	95	122	5384	102
1/2	13	1.2700	0.3604	4105	102	75	92	115	5783	149	109	130	163	6437	149
	20		0.4061	4854	122	88	108	136	6532	163	122	146	183	7253	156
9/16	12	1.4288	0.4623	5262	149	109	133	163	7539	204	149	188	224	8256	210
	18		0.5156	5874	163	122	148	183	8278	231	176	209	258	9208	224
5/8	11	1.5875	0.5740	6532	204	149	183	224	9231	298	231	244	326	10251	285
	18		0.6502	7394	231	176	207	258	10433	326	244	277	359	11612	298
3/4	10	1.9050	0.8484	9662	353	271	325	387	13653	515	380	408	570	15150	495
	16		0.9474	10796	407	298	363	448	15241	570	434	456	631	16919	542
7/8	9	2.2225	1.1735	13336	583	434	523	644	18870	814	624	658	895	20956	793
	14		1.2929	14697	637	475	576	705	20775	895	678	724	983	23088	861
1	8	2.5400	1.5392	17509	868	651	785	915	23360	1220	922	931	1342	27488	1173
	12		1.6840	19142	949	719	858	997	27080	1356	1003	1079	1492	30074	1241
1-1/8	7	2.8575	1.9380	19187	1085	814	968	1139	31162	1736	1302	1396	1898	34610	1681
	12		2.1742	21546	1193	895	1087	1254	34927	1953	1464	1566	2136	38828	1871
1-1/4	7	3.1750	2.4613	24404	1519	1139	1368	1593	38554	2468	1844	1970	2712	43954	2373
	12		2.7254	27035	1681	1247	1516	1762	43818	2712	2034	2183	2983	48671	2549
1-1/2	6	3.4925	2.9337	29076	1980	1492	1792	2068	47174	3227	2413	2586	3559	52391	3145
	12		3.3401	33113	2278	1708	2042	2373	53570	3688	2766	2935	4068	59648	3308
1-1/2	6	3.8100	3.5687	35381	2630	1980	2379	2746	57380	4284	3200	3430	4712	63731	4122
	12		4.0132	39781	2983	2224	2676	3118	142200	4827	3607	3856	5322	71669	4433

Note: These torque values do not apply to cadium plated fasteners.

SAE GRADE 5

SAE GRADE 8

Figure 2-9. Torque Chart

duma rent
www.duma-rent.com

This page left blank intentionally.

SECTION 3. USER RESPONSIBILITIES AND MACHINE CONTROL

3.1 GENERAL

IMPORTANT

SINCE THE MANUFACTURER HAS NO DIRECT CONTROL OVER MACHINE APPLICATION AND OPERATION, CONFORMANCE WITH GOOD SAFETY PRACTICES IN THESE AREAS IS THE RESPONSIBILITY OF THE USER AND HIS/HER OPERATING PERSONNEL.

This section provides the necessary information needed to understand control functions. Included in this section are the operating characteristics and limitations, and functions and purposes of controls and indicators. It is important that the user read and understand the proper procedures before operating the machine. These procedures will aid in obtaining optimum lift service and safe operation.

3.2 PERSONNEL TRAINING

The aerial platform is a personnel handling device; therefore it is essential that it be operated and maintained only by authorized and qualified personnel who have demonstrated that they understand the proper use and maintenance of the machine. It is important that all personnel who are assigned to and responsible for the operation and maintenance of the machine undergo a thorough training program and check out period in order to become familiar with the characteristics prior to operating the machine.

Persons under the influence of drugs or alcohol or who are subject to seizures, dizziness or loss of physical control must not be permitted to operate the machine.

Operator Training

Operator training must include instruction in the following areas:

1. Use and limitations of the platform controls, ground controls, emergency controls and safety systems.
2. Knowledge and understanding of this manual and of the control markings, instructions and warnings on the machine itself.
3. Knowledge and understanding of all safety work rules of the employer and of Federal, State and local statutes, including training in the recognition and avoidance of potential hazards in the work place; with particular attention to the work to be performed.
4. Proper use of all required personnel safety equipment, in particular the wearing of a safety harness or other approved fall protection devices with a lanyard attached to the platform at all times.
5. Sufficient knowledge of the mechanical operation of the machine to recognize a malfunction or potential malfunction.
6. The safest means to operate the machine where overhead obstructions, other moving equipment, and obstacles, depressions, holes, drop-offs, etc. on the supporting surface exist.
7. Means to avoid the hazards of unprotected electrical conductors.
8. Any other requirements of a specific job or machine application.

Training Supervision

Training must be done under the supervision of a qualified person in an open area free of obstructions until the trainee has developed the ability to safely control a machine in congested work locations.

Operator Responsibility

The operator must be instructed that he/she has the responsibility and authority to shut down the machine in case of a malfunction or other unsafe condition of either the machine or the job site and to request further information from his/her supervisor or an authorized JLG Distributor before proceeding.

NOTE: *Manufacturer or distributor will provide qualified persons for training assistance with first unit(s) delivered and thereafter as requested by the user or his/her personnel.*

3.3 OPERATING CHARACTERISTICS AND LIMITATIONS

General

A thorough knowledge of the operating characteristics and limitations of the machine is always the first requirement for any user, regardless of the user's experience with similar types of equipment.

Placards

Important points to remember during operation are provided at the control stations by DANGER, WARNING, CAUTION, IMPORTANT and INSTRUCTION placards. This information is placed at various locations for the express purpose of alerting personnel of potential hazards constituted by the operating characteristics and load limitations of the machine. See FOREWORD for definitions of the above placards.

Capacities

Raising boom above horizontal and/or extension of boom beyond retracted position with or without any load in platform, is based on the following criteria:

1. Machine is positioned on a smooth, firm and level surface.
2. Load is within manufacturer's rated design capacity.
3. All machine systems are functioning properly.
4. Machine is as originally equipped from JLG.

Stability

This machine as originally manufactured by JLG Industries Inc., when operated within its rated capacity on a smooth, firm and level supporting surface, and in accordance with the instructions provided on the machine and this manual, provides a stable machine for all platform positions.

Machine stability is based on two positions which are called FORWARD STABILITY and BACKWARD STABILITY. The machines position of least forward stability is shown in Figure 3-1., and its position of least backward stability is shown in Figure 3-2.

TO AVOID FORWARD OR BACKWARD UPSET, DO NOT OVERLOAD MACHINE OR OPERATE ON AN OUT-OF-LEVEL SURFACE.

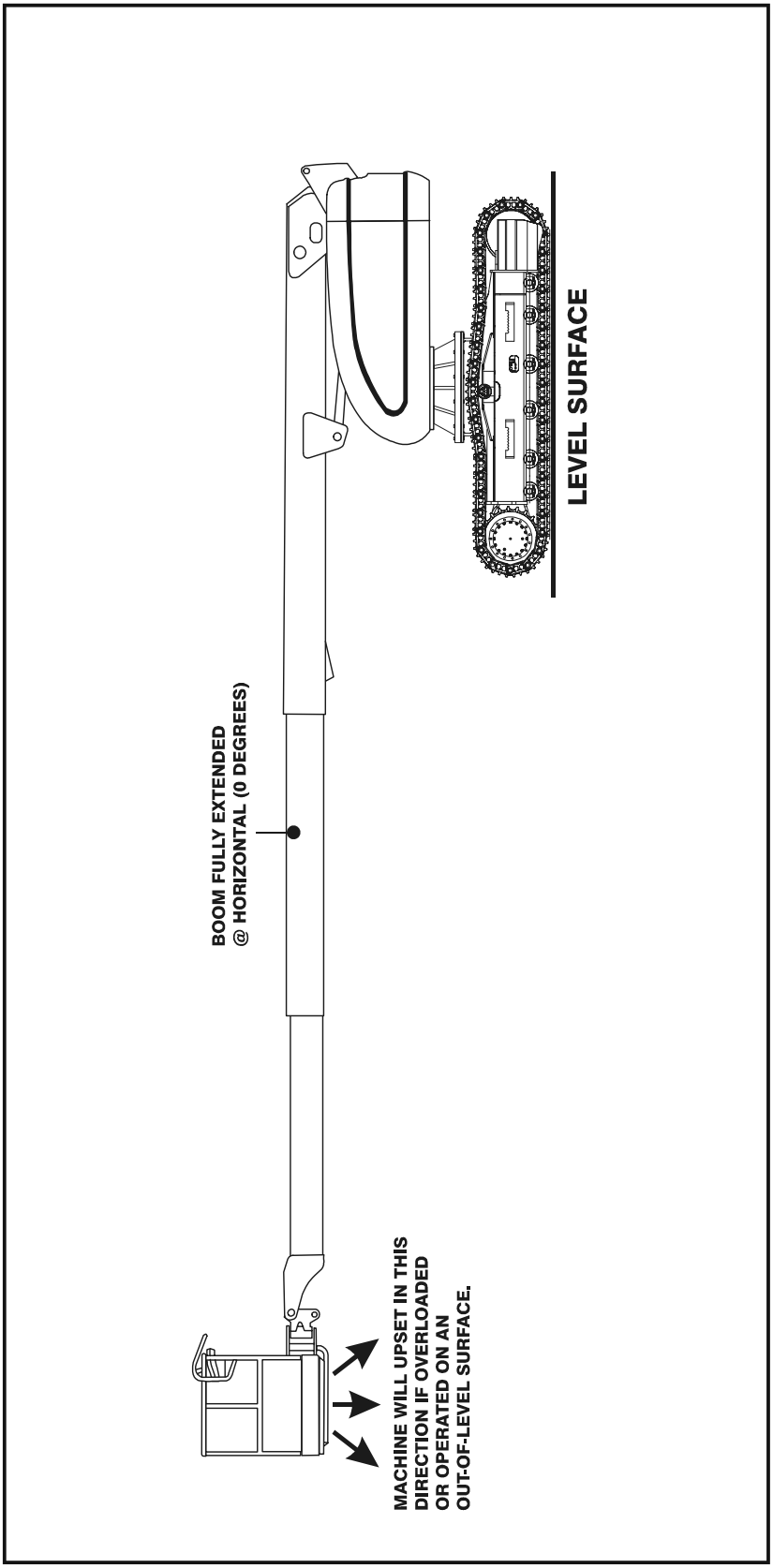

Figure 3-1. Position of Least Forward Stability

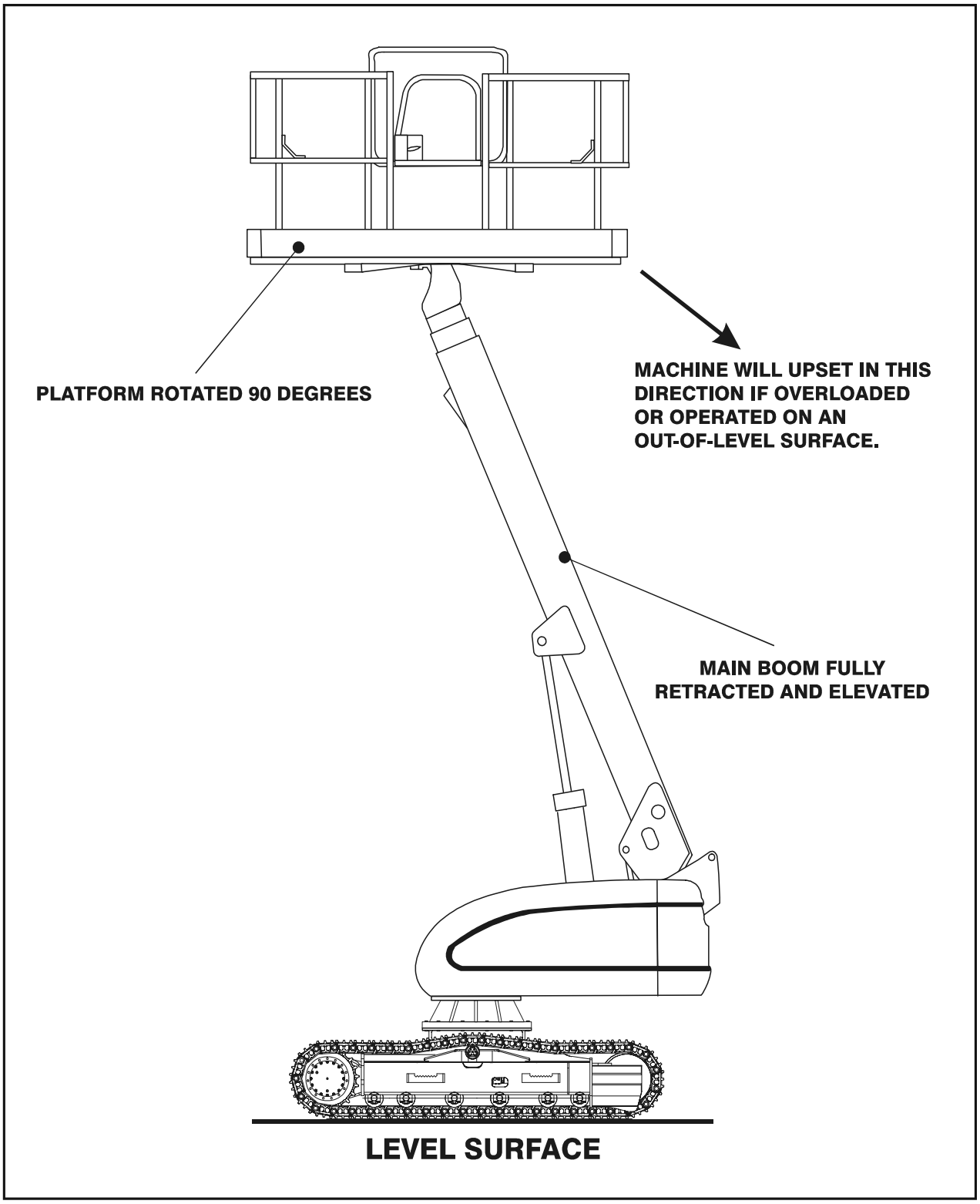

Figure 3-2. Position of Least Backward Stability

3.4 CONTROLS AND INDICATORS

NOTE: *This machines is equipped with control panels that use symbols to indicate control functions. Refer to Table 3-1 for decal located on the control box guard in front of the control box or by the ground controls for these symbols and the corresponding functions.*

Ground Controls

PERFORM PRE-OPERATIONAL CHECKS AND INSPECTIONS FROM THE GROUND CONTROL STATION. WHEN PERSONNEL ARE IN THE PLATFORM, OPERATION OF THE BOOM WILL ONLY BE PERFORMED WITH THE PERMISSION OF THE PLATFORM OCCUPANT(S).

NOTE: *When Power/Emergency Stop switch is in the "ON" position and engine is not running, an alarm will sound, indicating Ignition is "ON".*

⚠ CAUTION

WHEN THE MACHINE IS SHUT DOWN THE MASTER/EMERGENCY STOP SWITCH MUST BE POSITIONED TO THE "OFF" POSITION TO PREVENT DRAINING THE BATTERY.

NOTE: *On machines with Continental diesel engines, when Glow Plug Indicator is lighted (Yellow), wait until light goes out before cranking engine.*

1. Power/Emergency Stop Switch.

   Pull out ON-OFF POWER/EMERGENCY STOP SWITCH to turn on engine ignition and power to the electrical system. Push in to shut off engine and remove power from the controls. The Ground Control Emergency Stop Switch must be pulled out to operate the machine from either Ground Control or Platform Control. This allows the machine to be shut down in emergency situations by those untrained in the operation of the lift but who recognize the Emergency Stop Switch. The keyed Master Switch can also be used for the same purpose.

2. Engine Start/ Auxiliary Power Switch.

   A toggle-type ENGINE START/AUXILIARY POWER control switch, on the ground control panel, energizes the electrically operated auxiliary hydraulic pump, when actuated. To use auxiliary power, the switch must be held "DOWN" for duration of auxiliary pump use.

NOTE: *Auxiliary power only works if there is no oil pressure, and is disabled if engine is running.*

   a. The auxiliary pump functions to provide sufficient oil flow to operate the basic machine functions should the main pump or engine fail. The auxiliary pump enables the tower boom lift and telescope and swing to be operated.
   b. It should be noted that the functions will operate at a slower than normal rate because of the lower lpm of hydraulic fluid delivered.

NOTE: *When operating on auxiliary power, do not operate more than one function at a time. (Simultaneous operation can overload the 12-volt auxiliary pump motor.)*

   c. Position PLATFORM/GROUND switch to GROUND.
   d. Position POWER/EMERGENCY STOP switch to ON.
   e. Operate appropriate control switch or lever for desired function and hold.
   f. Position ENGINE START/AUXILIARY POWER switch to DOWN and hold.
   g. Release AUXILIARY POWER switch, allowed by the selected control switch or lever.
   h. Position the POWER/EMERGENCY STOP SWITCH to off.

3. Control Station Selector.

   A three position, center off, key activated PLATFORM/GROUND SELECT switch supplies power to the platform control console when positioned to PLATFORM. With the switch in GROUND position, power is shut off to the platform control console, and only the controls on the ground control panel are operable.

NOTE: *With the Platform/Ground Select Switch in the center position, power is shut off to controls at both operating stations.*

NOTE: *Main Lift, Swing, Platform Level, Main Telescope, Platform Rotator and Auxiliary control switches are spring-loaded and will automatically return to neutral (off) when released.*

⚠ WARNING

WHEN OPERATING THE BOOM ENSURE THERE ARE NO PERSONNEL AROUND OR UNDER PLATFORM.

⚠ WARNING

TO AVOID SERIOUS INJURY, DO NOT OPERATE MACHINE IF ANY CONTROL LEVERS OR TOGGLE SWITCHES CONTROLLING PLATFORM MOVEMENT DO NOT RETURN TO THE OFF POSITION WHEN RELEASED.

4. Main Lift Control.

   The MAIN LIFT control switch provides raising and lowering of the main boom when positioned to UP or DOWN.

5. Main Telescope Control.

   The MAIN TELESCOPE control switch provides extension and retraction of the boom, when positioned to IN or OUT.

6. Swing Control.

   The SWING control switch provides 360 degrees continuous turntable rotation when positioned to RIGHT or LEFT.

7. Hourmeter.

   An hourmeter, installed in the top portion of the Ground Control box, registers the amount of time the machine has been in use, with engine running. By connecting into the oil pressure circuit of the engine, only engine run hours are recorded. The hourmeter registers up to 9,999.9 hours and cannot be reset.

8. Platform Rotate.

   A three position ROTATE control switch permits rotation of the platform when positioned to LEFT or RIGHT.

9. Platform Leveling Override.

   A three position LEVEL control switch allows the operator to compensate for any difference in the automatic self leveling system by positioning the control switch to UP or DOWN.

10. Articulating Jib Boom. (If Equipped)

    The ARTICULATING control switch provides raising and lowering of the jib when positioned to UP or DOWN.

11. Drive Disabled Indicator.

    When illuminated, the drive function has been disabled. (Refer to Drive Function Operating Range Diagrams in Section 2).

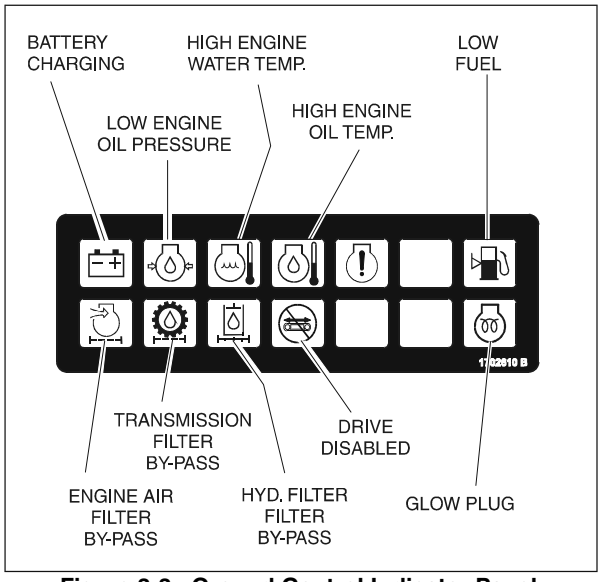

Figure 3-3. Ground Control Indicator Panel

duma rent www.duma-rent.com

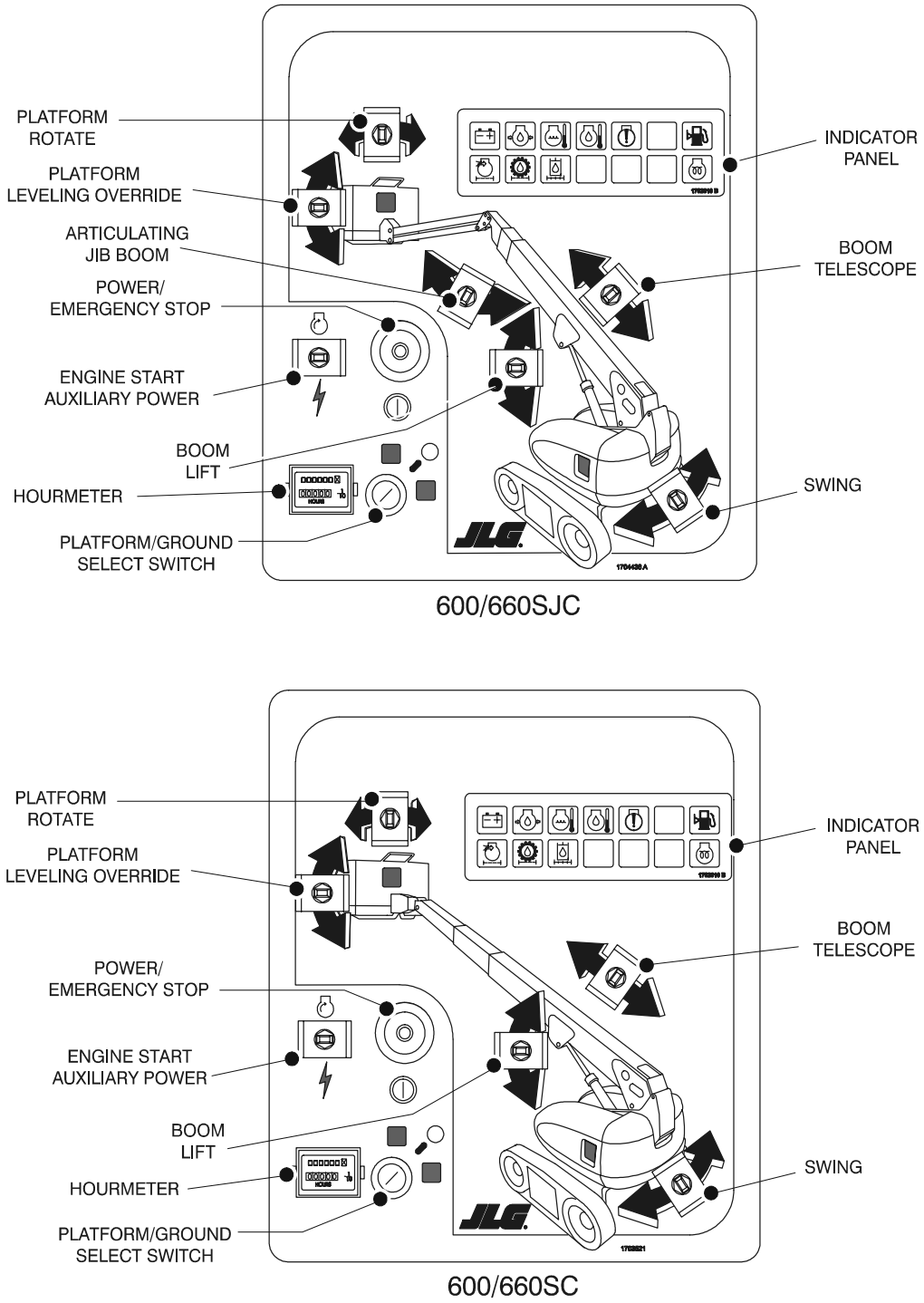

Figure 3-4. Ground Control Station

12. Battery Charging Indicator.

    When illuminated indicates a problem in the battery or charging circuit, and service is required.

13. Engine Air Filter Indicator.

    When illuminated indicates that the air filter is too restrictive and needs to be replaced.

14. Engine Oil Pressure Indicator.

    When illuminated indicates that engine oil pressure is below normal and service is required.

15. Transmission Pump Oil Filter Indicator.

    When illuminated indicates that charge pump filter is too restrictive and needs to be replaced. This indicator has an integral temperature sensor (70 degrees F.) so that false signals are not generated when the hydraulic oil is below normal operating temperature.

16. Hydraulic Oil Filter Indicator.

    When illuminated indicates that the return oil filter is too restrictive and needs to be replaced.

17. Engine Oil Temperature Indicator.

    When illuminated indicates that the temperature of the engine oil, which also serves as engine coolant, is abnormally high and service is required.

18. Low Fuel Level Indicator.

    When illuminated indicates that the fuel level is 1/8 full or less. When the light first turns on, there are approximately four usable gallons of fuel remaining.

Platform Station

NOTE: *For engine starting, the footswitch must be in the released (up) position. Footswitch must be actuated in order for controls to function.*

NOTE: *These machines have a 7 second delay timer. If function has not been activated with in 7 second after depressing the footswitch, recycle footswitch.*

1. Footswitch.

   This feature makes it necessary to depress the footswitch to allow operation of the controls.

⚠ WARNING

TO AVOID SERIOUS INJURY, DO NOT REMOVE, MODIFY OR DISABLE THE FOOTSWITCH BY BLOCKING OR ANY OTHER MEANS.

⚠ IMPORTANT

FOOTSWITCH MUST BE ADJUSTED SO THAT FUNCTIONS WILL OPERATE WHEN PEDAL IS APPROXIMATELY AT ITS CENTER OF TRAVEL. IF SWITCH OPERATES WITHIN LAST 1/4" OF TRAVEL, TOP OR BOTTOM, IT SHOULD BE ADJUSTED.

2. Power/Emergency Stop.

   An ON-OFF POWER/EMERGENCY STOP switch and a separate ENGINE START/AUXILIARY POWER toggle switch on the platform console supply electrical power to the starter solenoid, when the ignition switch is placed in the “ON” position and the ENGINE START switch is push forward.

3. Enable Indicator. (Green)

   This green illuminator indicates that the footswitch is depressed and the platform controls are ready for use. To enable the controls, depress the footswitch and select any function within seven seconds. The controls will then remain active as long as there is not a delay of seven seconds between stopping one function and starting the next one. If the seven second interval is exceeded, the enable light will go out and the controls will not operate. To enable the controls again, remove your foot from the footswitch and depress the footswitch.

4. Travel Warning Horn.

   A push-type HORN switch supplies electrical power to an audible warning device when pressed.

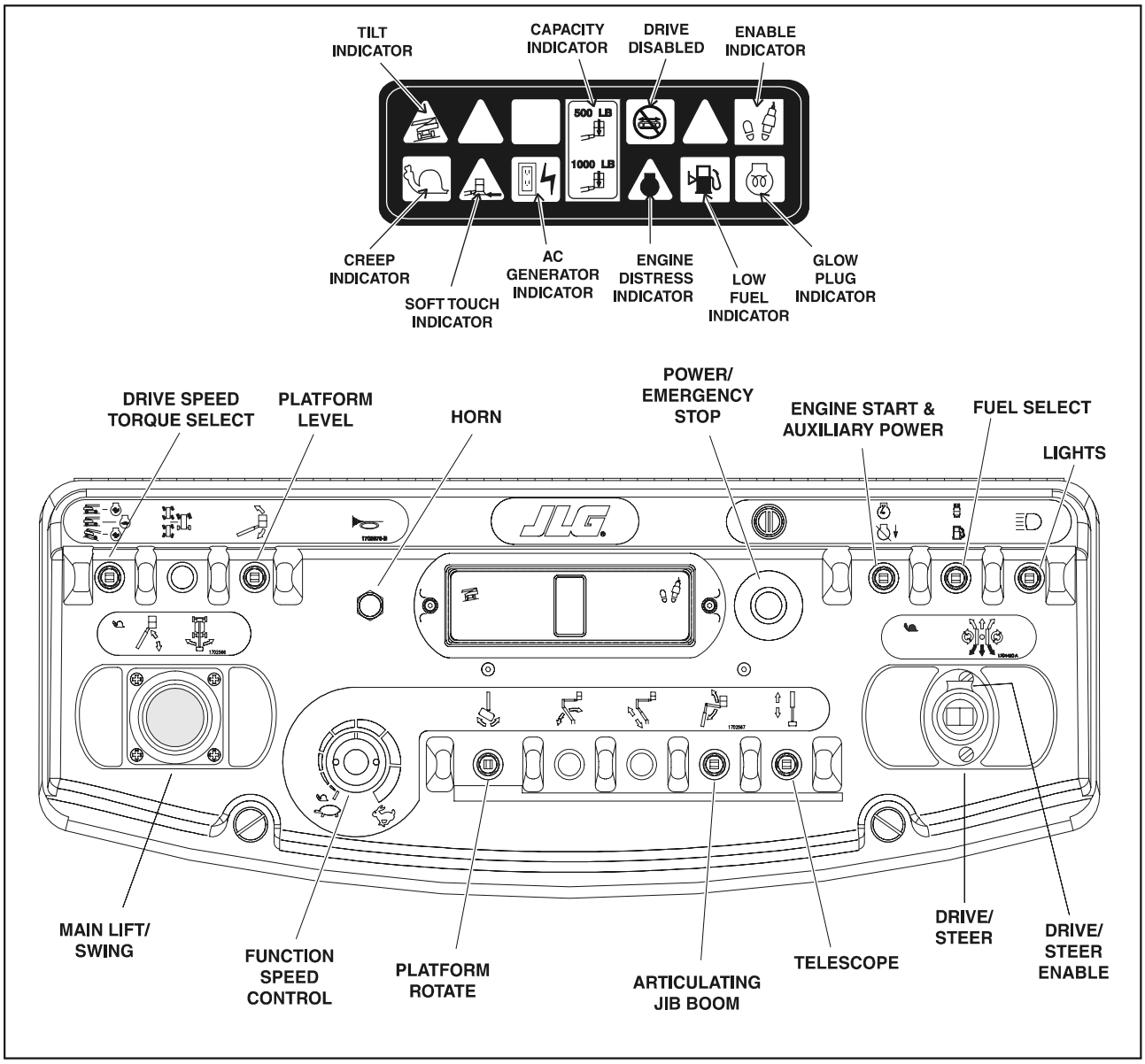

Figure 3-5. Platform Control Console

5. Tilt Alarm Warning Light. (Orange)

   This orange illuminator indicates that the chassis is on a slope. If illuminated when boom is raised or extended, retract and lower to below horizontal then reposition machine so that it is level before extending boom or raising boom above horizontal. If the boom is above horizontal and the machine is on a 5 degree slope, an alarm will sound and CREEP is automatically activated.

⚠ WARNING

IF ILLUMINATED WHEN BOOM IS RAISED OR EXTENDED, RETRACT AND LOWER TO BELOW HORIZONTAL THEN REPOSITION MACHINE SO THAT IT IS LEVEL BEFORE EXTENDING BOOM OR RAISING BOOM ABOVE HORIZONTAL.

NOTE: *MAIN LIFT, SWING, and DRIVE control levers are spring-loaded and will automatically return to neutral (OFF) position when released.*

⚠ WARNING

TO AVOID SERIOUS INJURY, DO NOT OPERATE MACHINE IF ANY CONTROL LEVERS OR TOGGLE SWITCHES CONTROLLING PLATFORM MOVEMENT DO NOT RETURN TO THE OFF OR NEUTRAL POSITION WHEN RELEASED.

6. Main Lift/Swing Controller.

   An infinitely proportional dual axis joystick is provided for main lift and swing. Push forward to lift up, pull backward to lift down. Move right to swing right, move left to swing left.

NOTE: *Main lift and swing functions may be selected in combination. The handle features a round gate so that maximum speed is reduced when multiple functions are selected.*

7. Main Telescope Control.

   The MAIN TELESCOPE control switch affords extension and retraction of the main boom when positioned to IN or OUT.

8. Drive/Steer.

   Proportional dual axis joystick is provided to control drive and steer. Push forward to drive straight forward. The joystick is proportional, with the drive speed increasing as the joystick is moved further from its neutral position. Moving the joystick forward and to the side steers the machine in the direction of the side displacement of the joystick. With the joystick positioned all the way to the side and slightly forward, the machine will turn in place with one track stopped and the other one turning the machine around the center of the stopped track.

   Moving the joystick to the side (no dislocation in the forward or aft direction) will turn the machine by counterrotation around the center of the machine by powering the tracks in opposite directions.

   Pulling the joystick back and to the sides controls speed and direction of drive in reverse.

NOTE: *Both drive and steer functions work in the opposite direction when the boom is positioned over front of the chassis (over idler wheels).*

NOTE: *When boom is positioned above horizontal and any of the following switches, DRIVE SPEED/TORQUE SELECT or FUNCTION SPEED, are positioned to HIGH, high function speeds are automatically cut out and the machine continues to operate at a lower speed.*

⚠ CAUTION

DO NOT OPERATE MACHINE IF DRIVE SPEED /TORQUE SELECT OR FUNCTION SPEED SWITCHES OPERATE WHEN BOOM IS ABOVE HORIZONTAL.

9. Drive/Steer Enable.

   The Drive/Steer Enable Switch (trigger switch) is located on the front of the Drive Steer Joystick. The button must be pushed in for the Drive/Steer control to function. If at any time the Enable Switch is pushed in and no function is operated for a period of 7 seconds, the switch will "time-out" and the footswitch in the platform must be cycled again to renew normal functions.

10. Function Speed.

    The knob provides variable speed control of all boom functions grouped together to the right of the knob. For smoothest operation of these functions, use two hands: rotate the knob counterclockwise to the slowest position, select the function switch, and while holding the switch on, rotate the knob to the desired speed. To achieve a smooth stop, rotate the knob ccw to a slow speed prior to letting go of the function switch.

    Rotating the knob fully counterclockwise until a click is heard puts all controls, including drive, main lift, and swing into “creep” speed. This slow speed is used for fine positioning of the platform when close to obstacles. A snail symbol is used to indicate “creep” speed and is shown at the Function Speed knob as well as near the proportional controllers to act as a reminder.

11. Drive Speed/Torque Select.

    The machine has a three position switch.

    The forward position gives maximum drive speed by shifting the drive motors to minimum the displacement and giving high engine when drive controller is moved.

    The back position gives maximum torque for rough terrain, climbing grades, and sharp turns. In this position, the motors are shifted t maximum displacement and the engine in high speed when the drive controller is moved.

    The center position allows the machine to be driven as quietly as possible by leaving the engine at mid speed and the drive motors in maximum displacement.

12. Creep Speed Indicator.

    Illuminated (Green) when the Function Speed Control is turned to the creep position, the indicator acts as a reminder that all functions are set to the slowest speed.

13. Drive Disabled Indicator.

    When illuminated, the drive function has been disabled. (Refer to Drive Function Operating Range Diagrams in Section 2).

14. Platform Rotate.

    The PLATFORM ROTATE control switch allows the operator to rotate the basket to the left or right when positioned to the desired direction.

15. Platform Leveling Override.

    The PLATFORM LEVEL control switch allows the operator to adjust the level of the platform by positioning the switch to UP or DOWN.

16. Articulating Jib Boom. (If Equipped)

    Push level, toggle switch forward to lift up, pull back to lift down. Variable lift speed is using the Function Speed Control.

17. Fuel Select (Dual Fuel Engine Only). (If Equipped)

    Gasoline or liquid propane fuel may be selected by moving the switch to the appropriate position. It is unnecessary to purge the fuel system before switching fuels, so there is no waiting period when switching fuels while the engine is running.

18. Lights. (If Equipped)

    This switch operates control console panel lights and head lights if the machine is so equipped. The ignition switch does not have to be on to operate the lights, so care must be taken to avoid draining the battery if left unattended. The master switch and / or the ignition switch at the ground control will turn off power to all lights.

19. Engine Distress Indicator Light (Yellow).

    The light turns on and an alarm sounds when machine’s power system requires immediate service. Any of the following conditions will turn on light and alarm: low engine oil pressure, high engine coolant temperature, clogged engine air filter, low alternator output, clogged hydraulic oil return filter, or clogged charge pump filter.

20. Soft Touch Indicator. (If Equipped)

    When illuminated (Yellow) the Soft Touch bumper is against an object. All controls are cut out until the override button is pushed, at which time controls are active in the Creep mode.

21. AC Generator. (Green)

    When illuminated (Green), the light indicates the generator is in operation.

22. Low Fuel Indicator. (Yellow)

    When illuminated (Yellow), the fuel tank is 1/8 full or less. When the light first turns on, there are approximately four usable gallons of fuel remaining.

23. Capacity Indicator (CSA & Australian).

    When illuminated (Red), the light indicates the maximum platform capacity for the current position of the platform. 455 kilograms capacity is permitted at restricted platform positions (shorter boom lengths and higher boom angles), and 230 kilograms is the maximum capacity in all other positions.

24. Auxiliary Power.

    A toggle-type AUXILIARY POWER control switch energizes the electrically operated hydraulic pump, when actuated. (Switch must be held ON for duration of auxiliary pump use.)

    The auxiliary pump functions to provide sufficient oil flow to operate the basic machine functions should the main pump or engine fail. The auxiliary pump will operate tower boom lift, tower telescope, main boom lift, main telescope and swing.

    It should be noted that the functions will operate at a slower than normal rate because of the lower gpm delivered.

⚠ IMPORTANT

WHEN OPERATING ON AUXILIARY POWER, DO NOT OPERATE MORE THAN ONE FUNCTION AT THE SAME TIME. SIMULTANEOUS OPERATION CAN OVERLOAD THE AUXILIARY PUMP MOTOR.

NOTE: *The main function of auxiliary power is to lower the platform in the event of primary power failure. Determine the reason for primary power failure and have the problem corrected by a certified JLG service technician.*

NOTE: *Auxiliary power is primarily intended for platform lowering in the event of primary power failure. However, auxiliary power may be used for platform positioning when operating in close quarters in the following sequence:*

a. Position PLATFORM/GROUND switch to PLATFORM.
b. Position POWER/EMERGENCY STOP switch to ON.
c. Depress and hold footswitch.
d. Operate appropriate control switch or lever for desired function and hold.
e. Position AUXILIARY POWER switch to ON and hold.
f. Release AUXILIARY POWER switch, selected control switch or lever, and footswitch.
g. Position POWER/EMERGENCY STOP switch to OFF.

3.5 PLACARDS AND DECALS

Read and understand all placards and decals. Do not operate any machine on which DANGER, WARNING, CAUTION OR INSTRUCTION PLACARDS OR DECALS ARE MISSING OR ILLEGIBLE. Replace placards and decals if damaged, missing or illegible.

Decals are made of Lexan Pressure Sensitive Adhesive with a protective film on the front. Remove the damaged decal and thoroughly clean surface before installing a new decal. Simply peel off, press on to surface.

NOTE: *Placards and Decals can be ordered by using part numbers located by each placard or decal. (Figure 3-8.)*

3.6 HYDRAULIC TOOL CIRCUIT INSTRUCTIONS (OPTIONAL)

Tool Circuit

To Operate: (with engine running and foot switch released).

1. Be sure hydraulic switch is in the “OFF” position. Located on the left side of platform below console box.

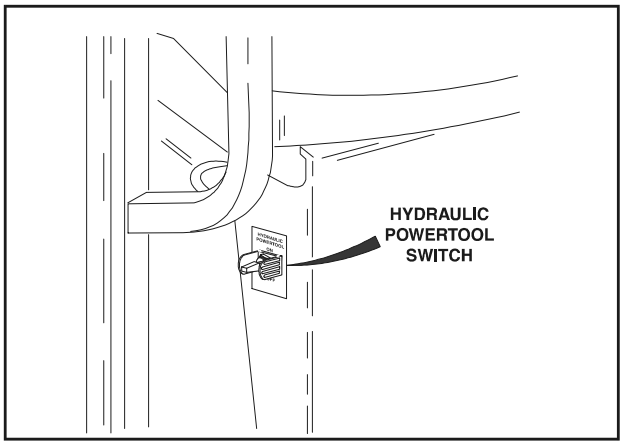

2. Make sure the hydraulic tool about to be operated is at a “safe” setting.

3. Plug tool it into quick-disconnect fittings mounted on platform rail. The male quick connect is the pressure feed line.

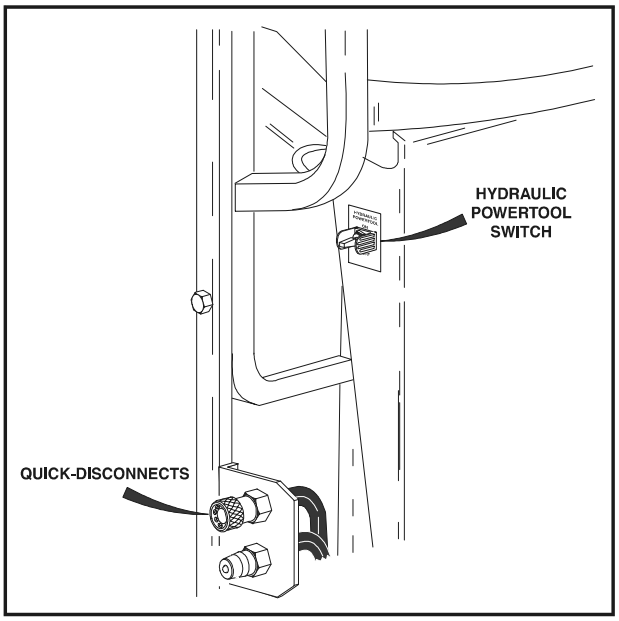

4. Set flow control knob to desired setting.

NOTE: *Each notch in the flow control knob corresponds to approximately 1 GPM (ex. setting 2 = 2 GPM). At setting seven (7) the pump has reached its maximum flow rate therefore any setting past 7 will produce no additional flow.*

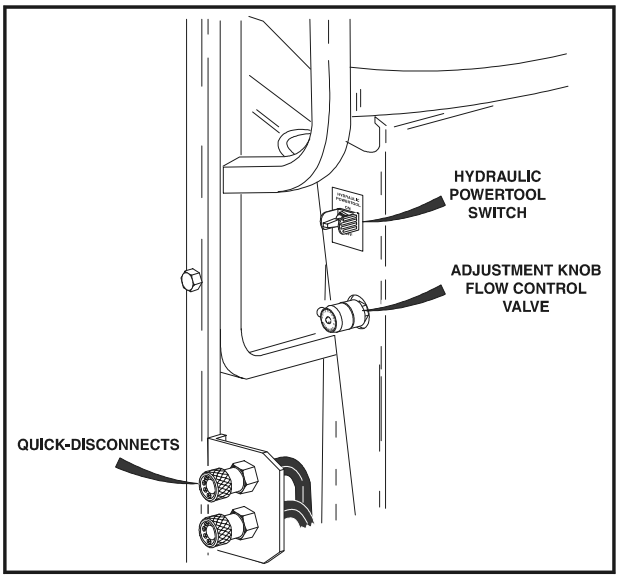

5. Turn hydraulic powertool switch to the “ON” position. Oil will now flow to the tool. It is possible to adjust the flow control knob during operation to achieve desired tool performance.
6. When finished, turn the hydraulic tool switch to the “OFF” position.
7. Disconnect tool from the quick-disconnects.

⚠ CAUTION

TURN HYDRAULIC TOOL SWITCH TO THE “OFF” POSITION IN ORDER TO SWITCH TOOLS.

NOTE: *The tool circuit will not work with the foot switch depressed. If the foot switch is depressed during tool circuit operation the tool circuit will stop functioning until the foot switch is released.*

NOTE: *The tool is designed to operate at 2600 psi. If necessary this can be adjusted for a higher or lower pressure.*

NOTE: *With the foot switch released to operate the tool circuit all drive and boom functions are cut out.*

FUNCTION	SYMBOL	FUNCTION	SYMBOL
DRIVE SELECT		MAIN LIFT	
STEER SELECT		SWING	
PLATFORM LEVEL		FUNCTION SPEED CONTROL	
CHASSIS OUT OF LEVEL		PLATFORM ROTATE	
CREEP		TOWER LIFT	
PLATFORM CAPACITY INDICATOR	230 KG 455 KG	TOWER TELESCOPE	
ENGINE DISTRESS		ARTICULATING FLY BOOM	
LOW FUEL LEVEL		MAIN TELESCOPE	
AC GENERATOR ON		FUEL SELECT	

Figure 3-6. Control Panel Symbols - Sheet 1

FUNCTION	SYMBOL	FUNCTION	SYMBOL
GLOW PLUG INDICATOR		SOFT TOUCH OVERRIDE	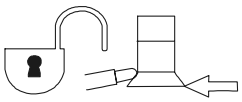
ENABLE INDICATOR		SOFT TOUCH INDICATOR	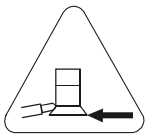
POWER EMERGENCY STOP		COUNTER ROTATE	
START AUXILIARY POWER		DRIVE STEER	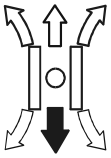

Figure 3-7. Control Panel Symbols - Sheet 2

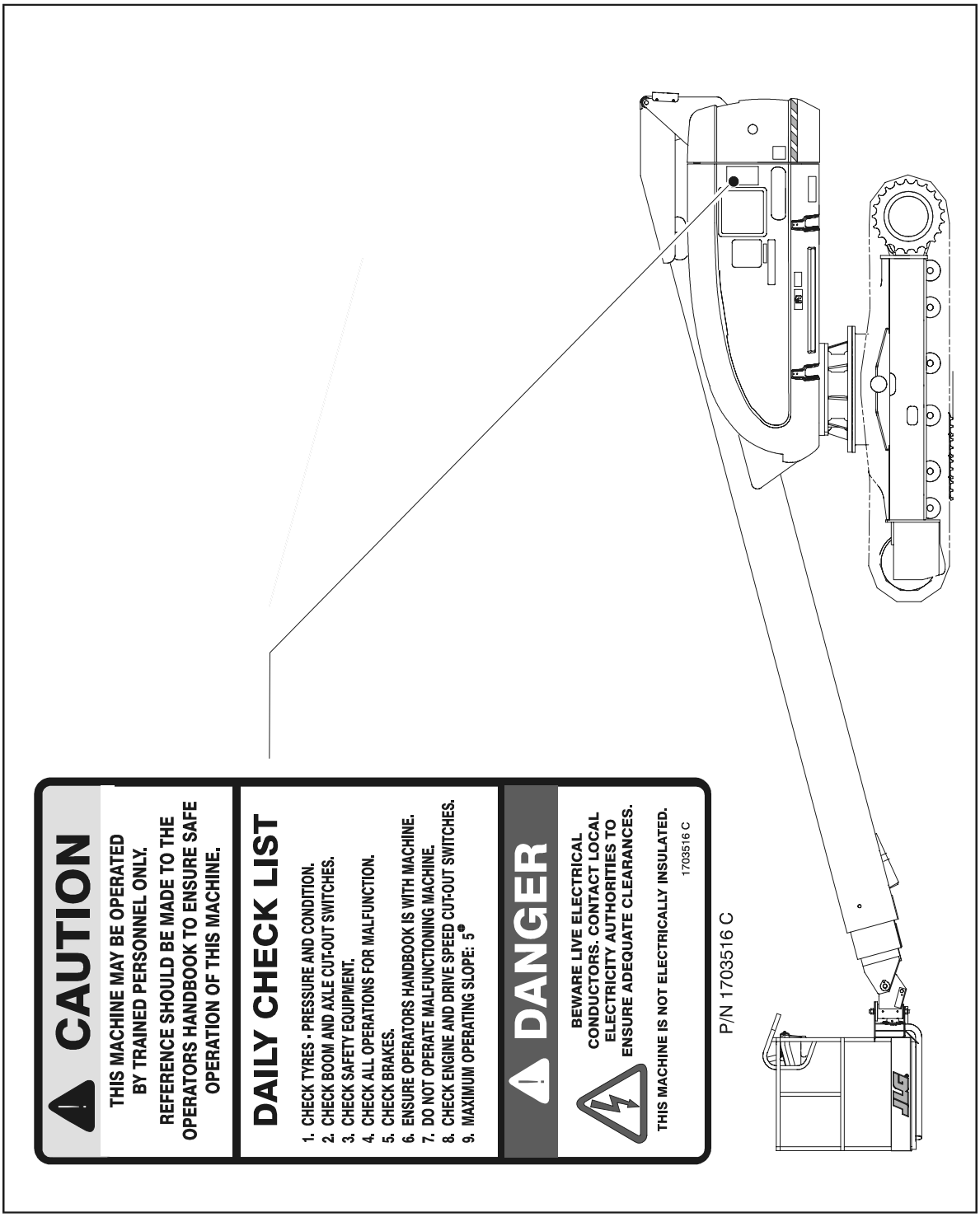

Figure 3-8. Decal Location - Sheet 1

duma rent www.duma-rent.com

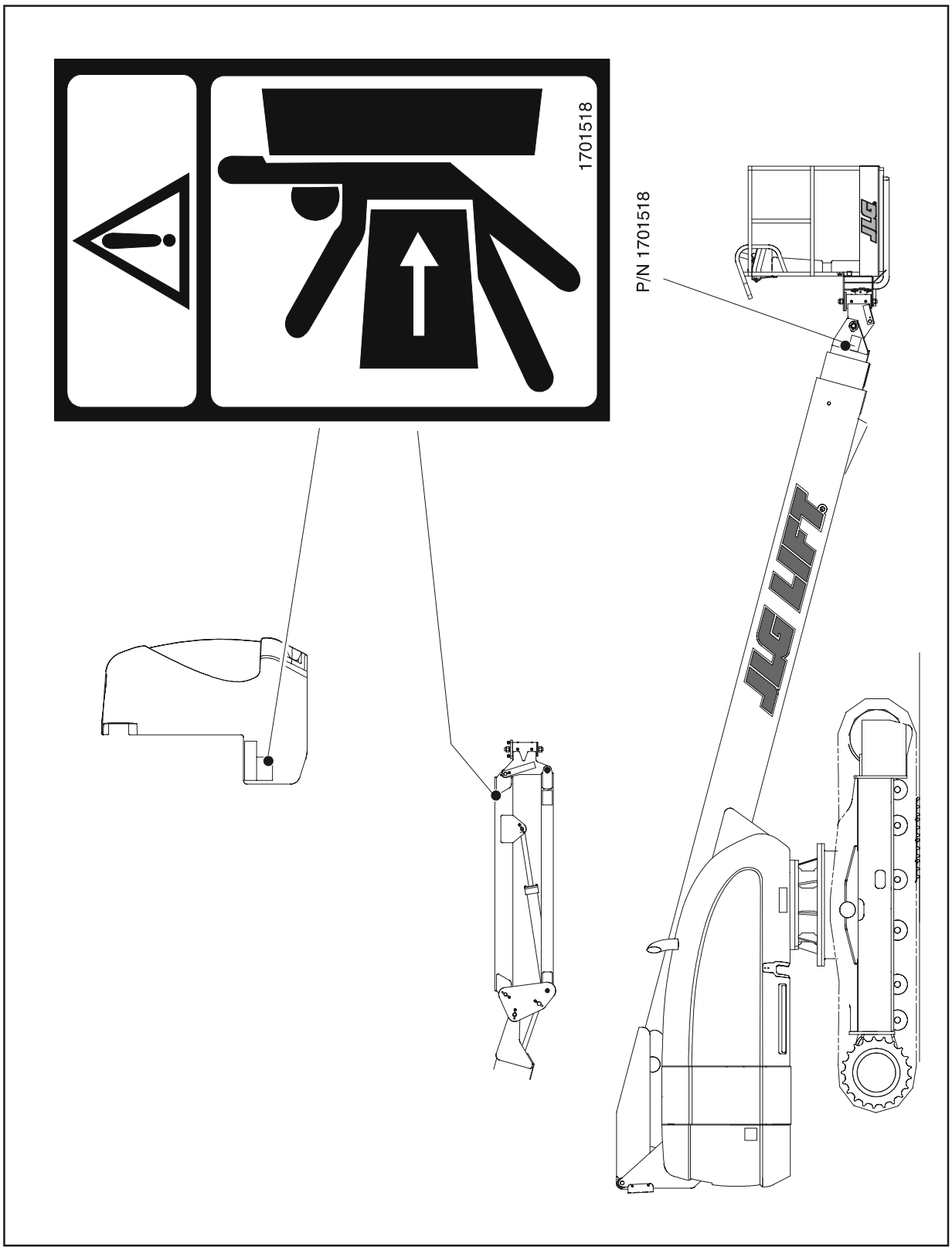

Figure 3-9. Decal Location - Sheet 2

duma rent
www.duma-rent.com

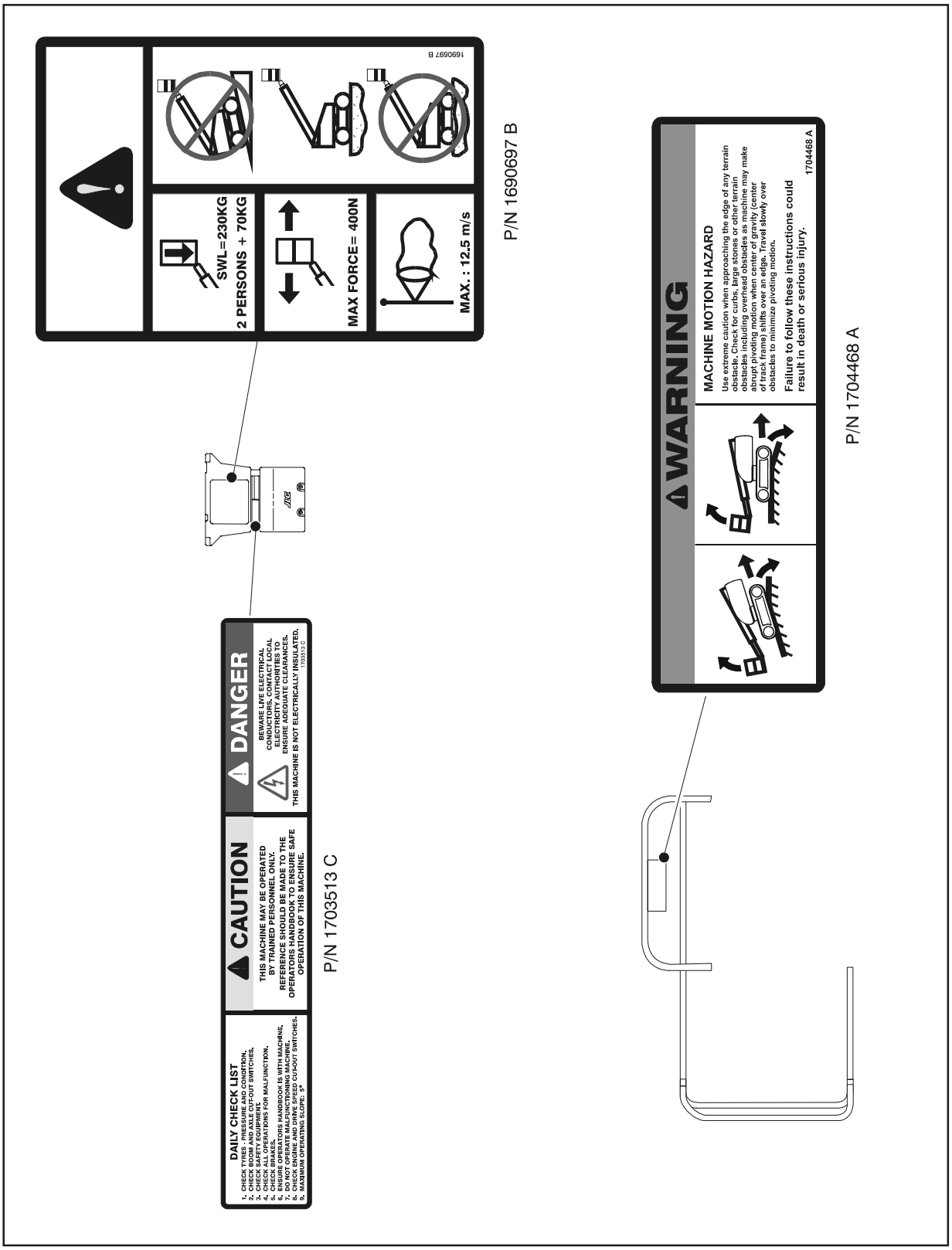

Figure 3-10. Decal Location - Sheet 3

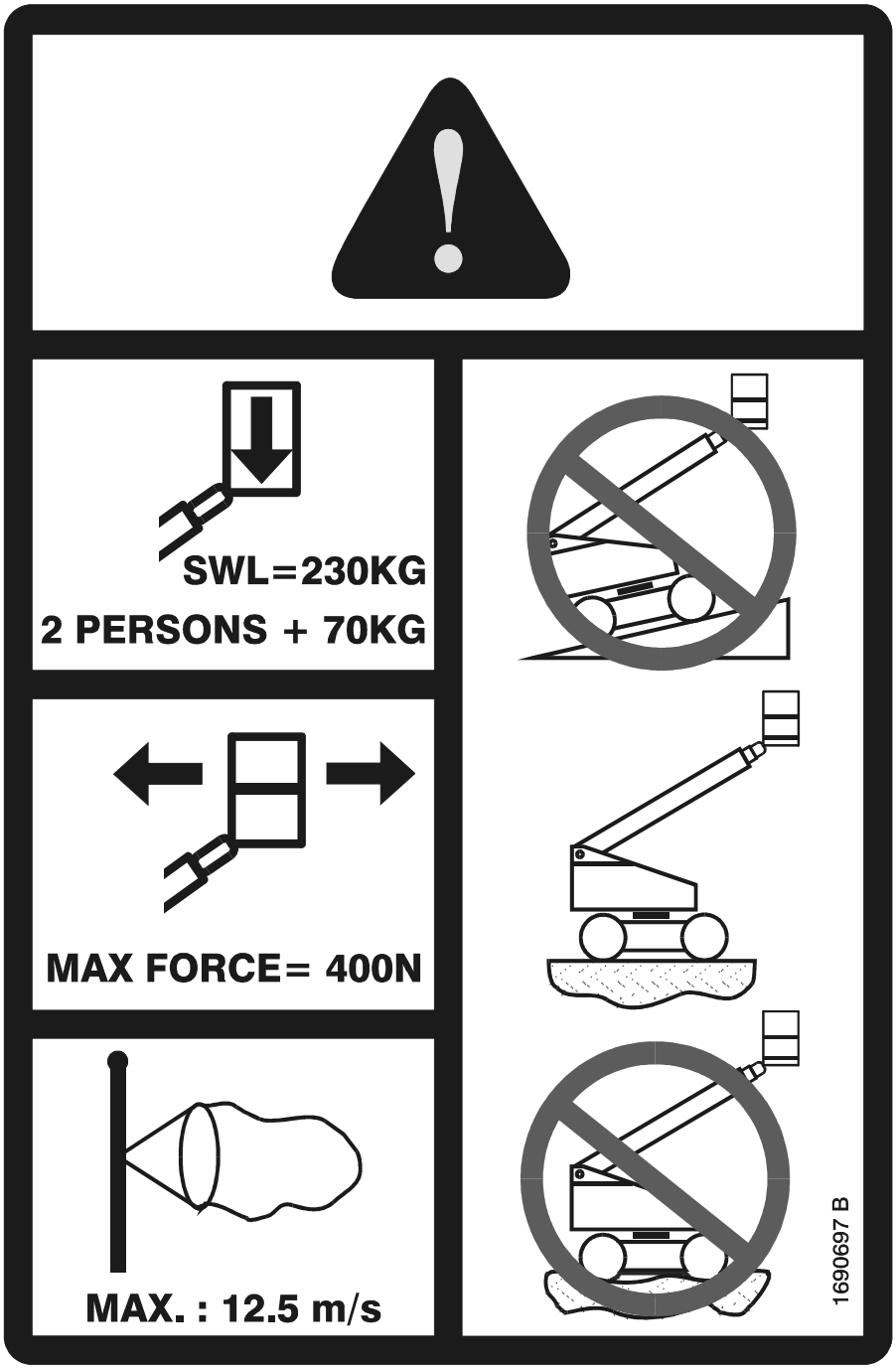

P/N 1690697 B

P/N 1701518

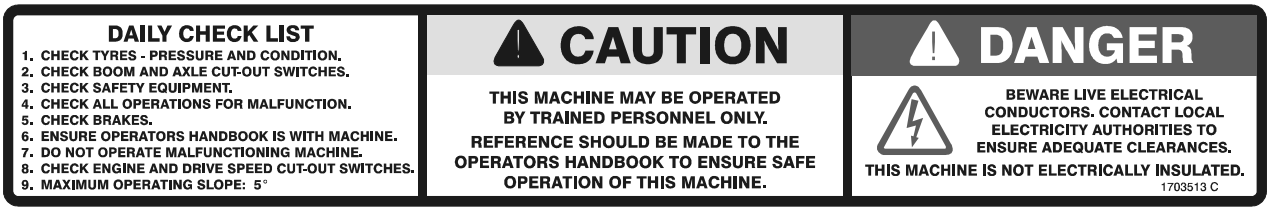

P/N 1703513 C

CAUTION

THIS MACHINE MAY BE OPERATED BY TRAINED PERSONNEL ONLY.

REFERENCE SHOULD BE MADE TO THE OPERATORS HANDBOOK TO ENSURE SAFE OPERATION OF THIS MACHINE.

DAILY CHECK LIST

1. CHECK TYRES - PRESSURE AND CONDITION.
2. CHECK BOOM AND AXLE CUT-OUT SWITCHES.
3. CHECK SAFETY EQUIPMENT.
4. CHECK ALL OPERATIONS FOR MALFUNCTION.
5. CHECK BRAKES.
6. ENSURE OPERATORS HANDBOOK IS WITH MACHINE.
7. DO NOT OPERATE MALFUNCTIONING MACHINE.
8. CHECK ENGINE AND DRIVE SPEED CUT-OUT SWITCHES.
9. MAXIMUM OPERATING SLOPE: 5°

DANGER

BEWARE LIVE ELECTRICAL CONDUCTORS. CONTACT LOCAL ELECTRICITY AUTHORITIES TO ENSURE ADEQUATE CLEARANCES.

THIS MACHINE IS NOT ELECTRICALLY INSULATED.

1703516 C

P/N 1703516 C

WARNING

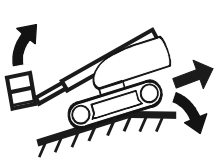

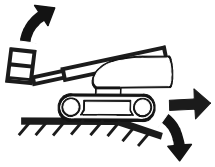

MACHINE MOTION HAZARD

Use extreme caution when approaching the edge of any terrain obstacle. Check for curbs, large stones or other terrain obstacles including overhead obstacles as machine may make abrupt pivoting motion when center of gravity (center of track frame) shifts over an edge. Travel slowly over obstacles to minimize pivoting motion.

Failure to follow these instructions could result in death or serious injury.

1704468 A

P/N 1704468 A

This page intentionally left blank.

SECTION 4. MACHINE OPERATION

4.1 DESCRIPTION

This machine is a self-propelled aerial work platform on the end of an elevating, telescoping and rotating boom. The JLG Lift's intended purpose is to position personnel with their tools and supplies at positions above ground level. The machine can be used to reach work areas located above and over machinery or equipment.

The JLG Lift has a primary operator Control Station in the platform. From this Control Station, the operator can drive and steer the machine in both forward and reverse directions. The operator can raise, lower, extend or retract the boom; swing the boom to the left or right; and when equipped with a platform rotator, can rotate the platform around the boom end. Standard boom swing is 360° continuous left and right of the stowed position. The machine has a Ground Control Station which will override the Platform Control Station. Ground Controls operate Main Boom Lift, Main Telescope and Swing and are to be used only in an emergency to lower the platform to the ground should the operator in the platform be unable to do so.

Instruction and hazard warnings are posted adjacent to both operator control stations and at other places on the machine. It is extremely important that operators know what instructions and warnings are placed on the machine, and review these periodically so that they are fresh in their minds. Vibrations emitted by these machines are not hazardous to an operator in the platform. The equivalent continuous A-Weighted sound pressure level at the work platform is less than 70 dB(A).

The JLG Lift is designed to provide efficient and safe operation when maintained and operated in accordance with warnings on the machine, in the Operators and Safety Manual, and all jobsite and government rules and regulations. As with any type of machinery, the operator is very important to efficient and safe operation. It is absolutely necessary that the JLG Lift be regularly maintained in accordance with this manual and the machine Service and Maintenance manual, and that any evidence of lack of maintenance, malfunction, excessive wear, damage or modification to the machine be reported immediately to the machine owner or the jobsite supervisor or safety manager and that the machine be taken out of service until all discrepancies are corrected.The JLG Lift is not intended to be used to lift material other than supplies which personnel in the platform require to do their job. Supplies or tools which extend outside the platform are prohibited. It must not be used as a forklift, crane, support for overhead structure, or to push or pull another object.

The machine is equipped with an auxiliary battery operated power unit which will provide hydraulic power in the event of a primary engine power loss. Auxiliary power can be controlled from either the Platform Control Station or the Ground Control Station. Follow the instructions placed at the control stations.

The JLG Lift is hydraulically powered using hydraulic motors and cylinders for various machine motions. The hydraulic components are controlled by electrically activated hydraulic valves using switches and control levers. The speeds of functions controlled by control levers are variable from zero to maximum speed depending upon the position of the control lever. Functions controlled by toggle switches are either on or off and higher or lower speed is possible when the Function Speed control switch is used in conjunction with the function toggle switch. A foot operated switch in the platform must be depressed before any controls will function and provides a means of emergency stop when the operator's foot is removed from the footswitch.

The JLG Lift is a crawler track type machine with drive power being supplied by a hydraulic motor for each final drive and sprocket. Each final drive is equipped with a spring applied, hydraulically released brake. The swing drive is also equipped with such a brake. These brakes are automatically applied any time the Drive or Swing control levers are returned to the neutral position.

The unrestricted capacity of the JLG Lift is 230 kg. This means that with a platform load of 230 kg. or less, the platform may be positioned anywhere the boom will reach. For CSA and Australian machines, 455 kg. capacity is permitted at restricted platform positions (shorter boom lengths and higher boom angles).

4.2 GENERAL

This section provides the necessary information needed to operate the machine. Included in this section are the procedures for starting, stopping, traveling, steering, parking, platform loading and transporting. It is important that the user read and understand the proper procedures before operating the machine.

4.3 ENGINE OPERATION

NOTE: *Initial starting should always be performed from the Ground Control station.*

Starting Procedure

1. Check engine oil. If necessary, add oil in accordance with the Engine Manufacturer's manual.
2. Check fuel level. Add fuel if necessary.
3. Check that air cleaner components are in place and securely fastened.

⚠ CAUTION

IF ENGINE FAILS TO START PROMPTLY, DO NOT CRANK FOR AN EXTENDED PERIOD. SHOULD ENGINE FAIL TO START ONCE AGAIN, ALLOW STARTER TO "COOL OFF" FOR 2-3 MINUTES. IF ENGINE FAILS AFTER SEVERAL ATTEMPTS, REFER TO ENGINE MAINTENANCE MANUAL.

NOTE: *Machines with diesel engines. After turning on ignition, operator must wait until glow plug indicator light goes out before cranking engine.*

4. Turn key of SELECT switch to GROUND. Position POWER/EMERGENCY STOP switch to ON, then push the ENGINE START switch to the upward position until engine starts.

⚠ CAUTION

ALLOW ENGINE TO WARM-UP FOR A FEW MINUTES AT LOW SPEED BEFORE APPLYING ANY LOAD.

5. After engine has had sufficient time to warm up, shut engine off.
6. Turn key of SELECT switch to PLATFORM.
7. From Platform position POWER/EMERGENCY STOP switch to ON, then push the ENGINE START switch to the forward position until engine starts.

NOTE: *Footswitch must be in released (up) position before starter will operate. If starter operates with footswitch in the depressed position, DO NOT OPERATE MACHINE.*

Shutdown Procedure

⚠ CAUTION

IF AN ENGINE MALFUNCTION NECESSITATES UNSCHEDULED SHUTDOWN, DETERMINE AND CORRECT CAUSE BEFORE RESUMING ANY OPERATION.

1. Remove all load and allow engine to operate at low speed setting for 3-5 minutes; this allows for further reduction of internal engine temperature.
2. Position POWER/EMERGENCY STOP switch to OFF.
3. Turn key of MASTER switch to OFF position.

Refer to Engine Manufacturer's manual for detailed information.

4.4 TRAVELING (DRIVING)

⚠ WARNING

DO NOT DRIVE WITH BOOM EXTENDED OR ABOVE HORIZONTAL EXCEPT ON A SMOOTH, FIRM AND LEVEL SURFACE.

TO AVOID LOSS OF TRAVEL CONTROL OR UPSET ON GRADES AND SIDESLOPES, DO NOT DRIVE MACHINE ON GRADES OR SIDESLOPES EXCEEDING THOSE SPECIFIED ON MANUFACTURERS NAMEPLATE LOCATED ON THE FRAME.

ASSURE THAT TURNTABLE LOCK IS ENGAGED BEFORE BEGINNING ANY EXTENDED TRAVELING. AVOID ANY TERRAIN FEATURES WHICH COULD CAUSE THE MACHINE TO UPSET.

DRIVE SPEED/TORQUE SELECT SWITCH SHOULD BE IN THE BACKWARD POSITION FOR:

- **TRAVELLING GRADES**
- **TRAVELLING IN DIFFICULT CONDITIONS**
- **SHARP TURNS (ESPECIALLY WITH ONE TRACK STOPPED**
- **COUNTERROTATION**

USE EXTREME CAUTION WHEN DRIVING IN REVERSE AND AT ALL TIMES WHEN DRIVING WITH THE PLATFORM ELEVATED AND SPECIALLY WHEN DRIVING WITH ANY PART OF THE MACHINE WITHIN 2 METERS OF AN OBSTRUCTION. DO NOT USE DRIVE TO MANEUVER PLATFORM CLOSE TO AN OBSTRUCTION. USE ONE OF THE BOOM FUNCTIONS.

duma rent www.duma-rent.com

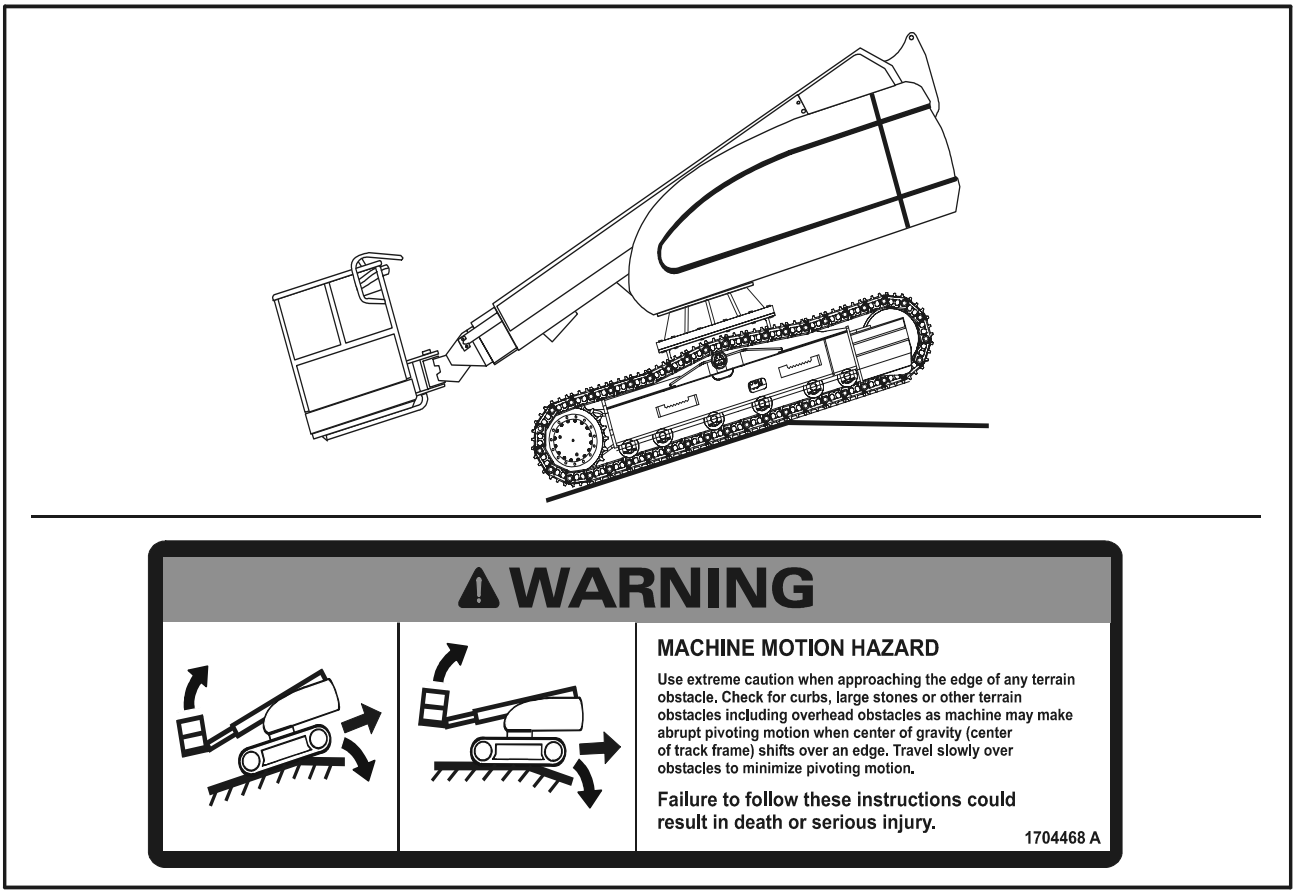

Figure 4-1. Machine Motion Hazard

WARNING

USE EXTREME CAUTION WHEN APPROACHING A CREST OF ANY TERRAIN OBSTACLE. CHECK FOR CURBS, LARGE STONES, OR OTHER TERRAIN OBSTACLES INCLUDING OVERHEAD OBSTACLES AS THE MACHINE WILL MAKE UNCONTROLLED PIVOTING MOTIONS WHEN THE CENTER OF GRAVITY (CENTER OF TRACK FRAME) SHIFTS OVER AN EDGE. SLOW DOWN TO MINIMIZE ACCELERATION DURING PIVOTING MOVEMENT.

BEFORE DRIVING, MAKE SURE THE BOOM IS POSITIONED OVER THE REAR OF THE CHASSIS (OVER FINAL DRIVES AND SPROCKETS). IF THE BOOM IS OVER THE FRONT OF THE CHASSIS (OVER THE IDLER WHEELS) STEER AND DRIVE CONTROLS WILL MOVE IN OPPOSITE DIRECTIONS TO MACHINE CONTROLS.

Traveling Forward or Reverse

1. With engine running, depress footswitch and position DRIVE control to FORWARD and hold for the duration of forward travel desired.
2. Depress footswitch and position DRIVE control to REVERSE and hold for duration of reverse travel desired.
3. Depress footswitch, move joystick (DRIVE/STEER CONTROL) to select desired direction of travel (forward or reverse), move DRIVE/STEER control to RIGHT for smooth turn to right and LEFT for smooth turn to left.
4. To obtain sharp turns, move DRIVE SPEED/TORQUE SELECT switch to the back position, slow down the travel speed and move the DRIVE control lever to RIGHT for a turn to the right and to LEFT for a turn to the left. The sharpest possible turn is achieved when the joystick is in the position to command one track to stop and the other to move slowly.

CAUTION

TURN IN PLACE ONLY IN AN AREA FREE OF OBSTACLES AND ONLY WITH THE BOOM FULLY RETRACTED. USE SLOW, GENTLE CONTROL MOVEMENTS AND DO NOT OPERATE ANY OTHER FUNCTIONS DURING COUNTERROTATION.

5. To obtain counterrotation (turn in place), stop the machine, move the DRIVE/STEER control lever

directly to RIGHT to get clockwise rotation and to LEFT to get counterclockwise rotation.

6. To obtain maximum travel speed, position the DRIVE controller to FAST and activate the following switches:
   a. Position DRIVE SPEED/TORQUE SELECT switch to FAST. (Forward Position)
7. Prior to stopping the machine, position switches as follows:
   a. Position DRIVE SPEED/TORQUE SELECT switch to LOW. (Backward Position)
8. For traveling up grades, position switches as follows:
   a. Position DRIVE SPEED/TORQUE SELECT switch to HIGH. (Backward position)

NOTE: *For smoother operation when driving with fully extended boom, place DRIVE control to SLOW before stopping.*

4.5 STEERING

Depress footswitch to steer machine, push on the left side of the switch to steer left, on the right side to steer right.

⚠ CAUTION

BEFORE OPERATING MACHINE, MAKE SURE BOOM IS POSITIONED OVER REAR. IF BOOM IS OVER FRONT, STEER AND DRIVE CONTROLS WILL MOVE IN OPPOSITE DIRECTION THAN INDICATED ON MACHINE PLACARDS.

4.6 PARKING AND STOWING

Park and stow machine as follows:

1. Park machine in travel position; boom lowered over rear, all access panels and doors closed and secured, ignition off, turntable locked.
2. Check that brakes hold machine in position.
3. Chock tracks front and rear.
4. Turn off SELECT switch and remove key.

4.7 PLATFORM

Loading From Ground Level

1. Position chassis on a smooth, firm and level surface.
2. If total load (personnel, tools and supplies) is less then rated capacity, distribute load uniformly on platform floor and proceed to work position.

Loading From Positions Above Ground Level

Before loading weight to platform above ground level:

1. Determine what the total rated capacity weight will be after additional weight is loaded (personnel, tools and supplies).
2. If total weight in platform will be less then rated capacity, proceed with adding weight.

Platform Level Adjustment

1. Leveling UP. Depress footswitch To raise platform, position PLATFORM LEVEL control switch UP and hold until platform is level.
2. Leveling DOWN. Depress footswitch To lower platform, position PLATFORM LEVEL control switch to DOWN and hold until platform is level.

Platform Rotation

1. Depress footswitch to rotate platform to the left, PLATFORM ROTATE control is positioned to the LEFT and held until desired position is reached.
2. Depress footswitch to rotate platform to the right, PLATFORM ROTATE control is positioned to the RIGHT and held until desired position is reached.

4.8 BOOM

⚠ WARNING

AN ORANGE TILT ALARM WARNING LIGHT, LOCATED ON THE CONTROL CONSOLE, LIGHTS WHEN THE CHASSIS IS ON A SLOPE. DO NOT SWING, EXTEND OR RAISE MAIN BOOM ABOVE HORIZONTAL WHEN LIT.

DO NOT DEPEND ON TILT ALARM AS A LEVEL INDICATOR FOR THE CHASSIS. TILT ALARM INDICATES CHASSIS IS ON A SLOPE. CHASSIS MUST BE LEVEL BEFORE SWINGING.

TO AVOID UPSET, IF ORANGE TILT ALARM WARNING LIGHT LIGHTS WHEN MAIN BOOM IS EXTENDED OR RAISED ABOVE HORIZONTAL, RETRACT AND LOWER PLATFORM TO NEAR GROUND LEVEL. THEN REPOSITION MACHINE SO THAT CHASSIS IS LEVEL BEFORE EXTENDING OR RAISING MAIN BOOM.

TRAVELING WITH MAIN BOOM RETRACTED AND BELOW HORIZONTAL IS PERMITTED ON GRADES AND SIDE SLOPES SPECIFIED ON CAUTION PLACARD AT PLATFORM.

TO AVOID SERIOUS INJURY, DO NOT OPERATE MACHINERY IF ANY CONTROL LEVERS OR TOGGLE SWITCHES CONTROLLING PLATFORM MOVEMENT DO NOT RETURN TO THE OFF OR NEUTRAL POSITION WHEN RELEASED.

TO AVOID A COLLISION AND INJURY IF PLATFORM DOES NOT STOP WHEN A CONTROL SWITCH OR LEVER IS RELEASED, REMOVE FOOT FROM FOOTSWITCH OR USE EMERGENCY STOP TO STOP THE MACHINE.

Swinging the Boom

⚠ IMPORTANT

ASSURE THAT TURNTABLE LOCK IS DISENGAGED BEFORE STARTING ANY SWING OPERATION.

3. Depress footswitch to swing boom, position SWING control switch or controller to RIGHT or LEFT for direction desired.

NOTE: *When boom functions are being operated there an interlock prevents the use of DRIVE and STEER functions.*

Raising and Lowering the Main Boom

To raise and lower Main Boom, position MAIN LIFT control switch or controller to UP OR DOWN and hold until desired height is reached.

Telescoping the Main Boom

To extend or retract Main Boom, position MAIN TELESCOPE control switch to IN or OUT and hold until platform reaches desired position.

4.9 SHUT DOWN AND PARK

1. Drive machine to a protected area.
2. Assure main boom is fully retracted and lowered over rear (Drive) axle; all access panels and doors closed and secured.
3. Remove all load and allow engine to operate 3-5 minutes at LOW setting to permit reduction of engine internal temperatures.
4. At Ground Controls, turn KEY SELECT switch to (center) OFF. Position, POWER/EMERGENCY STOP switch (down) to OFF. Remove key.
5. Cover Platform Control console to protect instruction placards, warning decals and operating controls from hostile environment.

4.10 TIE DOWN AND LIFTING

When transporting machine, boom must be in the stowed mode with turntable lock pin engaged and machine securely tied down to truck or trailer deck. Four tie down eyes are provided in the frame slab, one at each corner of the machine. (See Figure 4-3. Machine Tie Down.)

If it becomes necessary to lift the machine using an overhead or mobile crane, it is very important that the lifting devices are attached only to the designated lifting eyes, and that the turntable lock pin is engaged. (See Figure 4-4. Lifting Chart.)

NOTE: *Crane and lifting devices, chains, slings, etc., must be capable of handling at least:*

600SC - 9,979 kg. (22,000 lbs.)
600SJC - 10,660 kg. (23,500 lbs.)
660SJC - 12,247 kg. (27,000 lbs.)

⚠ IMPORTANT

ABOVE ARE MINIMUM WEIGHTS. CHECK WEIGHT OF UNIT PRIOR TO LIFTING.

NOTE: *Lifting eyes are provided at the front of the frame slab. An optional lifting attachment is required at the turntable end. Each of the four chains or slings used for lifting machine must be adjusted individually so machine remains level when elevated.*

⚠ IMPORTANT

SECURE TURNTABLE WITH TURNTABLE LOCK BEFORE TRAVELING LONG DISTANCES OR HAULING MACHINE ON TRUCK/TRAILER.

4.11 TOWING INFORMATION

Towing the Machine

⚠ WARNING

PERSONAL INJURY OR DEATH COULD RESULT WHEN TOWING A DISABLED MACHINE INCORRECTLY.

BLOCK THE MACHINE TO PREVENT MOVEMENT BEFORE FINAL DRIVES ARE DISENGAGED. THE MACHINE CAN ROLL FREE IF IT IS NOT BLOCKED. WITH FINAL DRIVES DISENGAGED, THE MACHINE CANNOT BE STOPPED OR STEERED.

FOLLOW THE RECOMMENDATIONS BELOW, TO PROPERLY PERFORM THE TOWING PROCEDURE.

RELIEVE THE HYDRAULIC TANK AND LINE PRESSURE BEFORE ANY DISASSEMBLY.

REMOVING THE PLUGS FROM THE BRAKE COVER OF THE TRAVEL MOTOR WITHOUT FIRST RELIEVING THE INTERNAL PRESSURE WILL CAUSE HYDRAULIC OIL TO SQUIRT OUT.

EVEN AFTER THE MACHINE HAS BEEN TURNED OFF, THE HYDRAULIC OIL CAN STILL BE HOT ENOUGH TO BURN. ALLOW THE HYDRAULIC OIL TO COOL BEFORE DRAINING.

NOTE: *To tow the machine, both final drives must be disengaged.*

NOTE: *Do not operate the travel motors with the final drives disengaged. Damage could result.*

These towing instructions are for moving a disabled machine for a short distance at low speed. Move the machine at a speed of 2 km/h (1.2 mph) or less to a convenient location for repair. Always haul the machine if long distance moving is required.

Shields must be provided on both machines. This will protect the operator if the tow line or the tow bar breaks.

Do not allow an operator to be on the machine that is being towed.

Before you tow the machine, make sure that the tow line or the tow bar is in good condition. Make sure that the tow line or the tow bar has enough strength for the towing procedure that is involved. The strength of the tow line or of the tow bar should be at least 150 percent of the gross weight of the towing machine. This requirement is for a disabled machine that is stuck in the mud and for towing on a grade.

Attach the cable to the towing eye on the front of the machine if you are towing the machine forward. Attach the cable to the towing eye on the rear of the machine if you are towing the machine backward.

Do not use a chain for pulling a disabled machine. A chain link can break. This may cause personal injury. Use a wire rope cable with ends that have loops or rings. Put an observer in a safe position in order to watch the pulling procedure. The observer can stop the procedure if the wire rope cable starts to break. Stop pulling whenever the towing machine moves without moving the towed machine.

Keep the tow line angle to a minimum. Do not exceed a 30 degree angle from the straight ahead position.

Quick machine movement could overload the tow line or the tow bar. This could cause the tow line or the tow bar to break. Gradual, steady machine movement will be more effective.

Normally, the towing machine should be as large as the disabled machine. Make sure that the towing machine has enough brake capacity, enough weight, and enough power. The towing machine must be able to control both machines for the grade that is involved and for the distance that is involved.

You must provide sufficient control and sufficient braking when you are moving a disabled machine downhill. This may require a larger towing machine or additional machines that are connected to the rear of the disabled machine. This will prevent the machine from rolling away out of control.

All situation requirements cannot be listed. Minimal towing machine capacity is required on smooth, level surfaces. On inclines or on surfaces in poor condition, maximum towing machine capacity is required.

Do not tow a loaded machine.

Consult your JLG distributor for the equipment that is necessary for towing a disabled machine.

Final Drive Sun Gear Removal

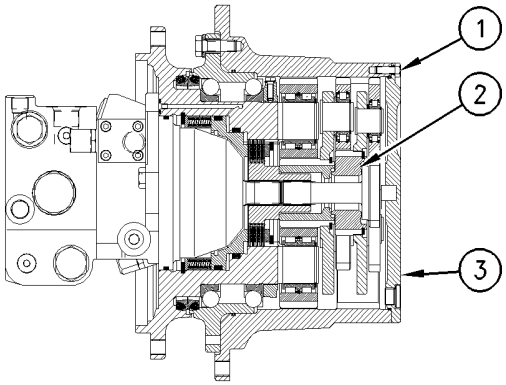

1. Thoroughly clean the area around the final drive. Make sure that you also clean the track shoes that are positioned above the final drive.
2. Drain the final drive oil into a suitable container. Refer to the Service Manual for the procedure.
3. Remove sixteen cover bolts (1) and final drive cover (3).
4. Remove sun gear (2) from the final drive.
5. Install final drive cover (3) and cover bolts (1). These parts were removed previously.
6. Fill the final drive with clean oil.
7. Repeat the procedure for the other final drive.

⚠ WARNING

WITHOUT THE SUN GEAR IN PLACE, THE BRAKES ARE INEFFECTIVE. PERSONAL INJURY OR DEATH COULD RESULT. PROVIDE OTHER MEANS TO HOLD OR STOP THE MACHINE.

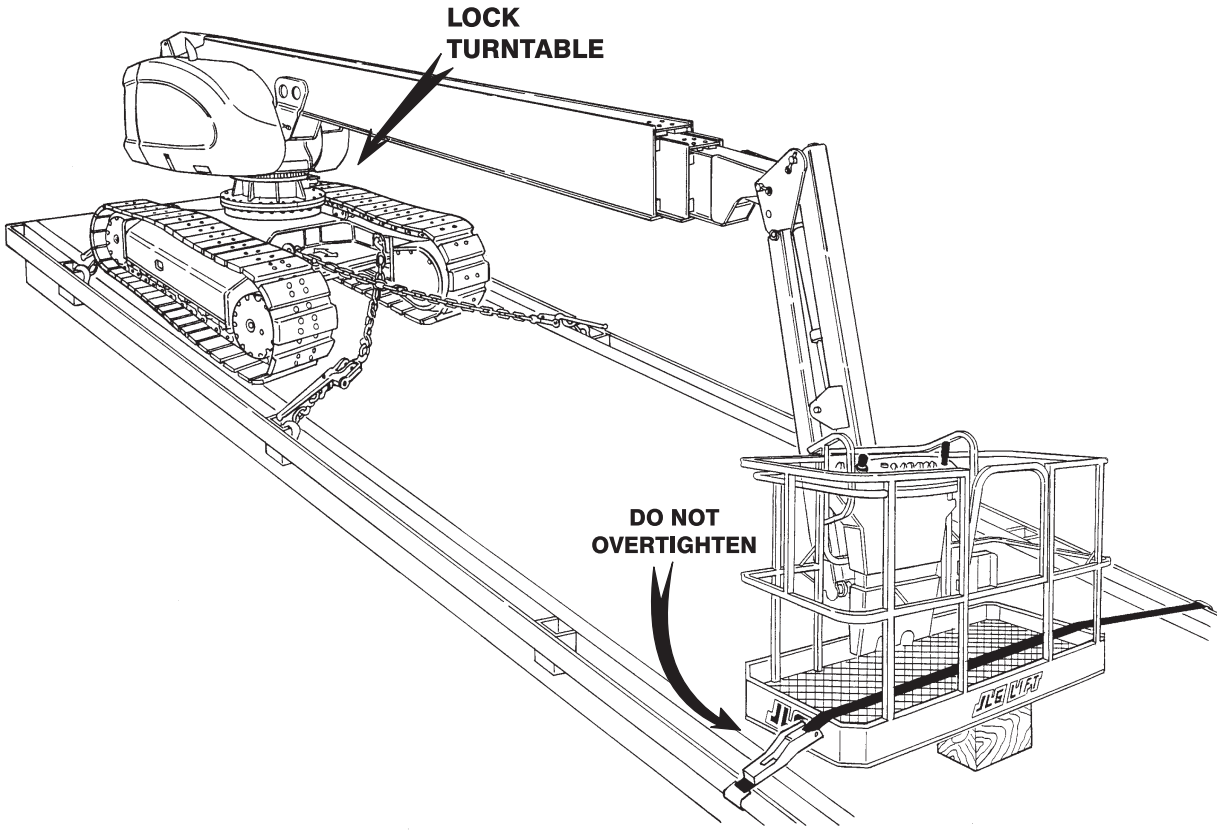

Note: **When transporting machine over rough terrain or long distance, the boom needs to be choked and strapped whenever the base boom is unable to rest on its pad. This prevents the boom from "Bouncing" up and down preventing possible damage while transporting.**

Figure 4-2. Machine Tie Down

duma rent www.duma-rent.com

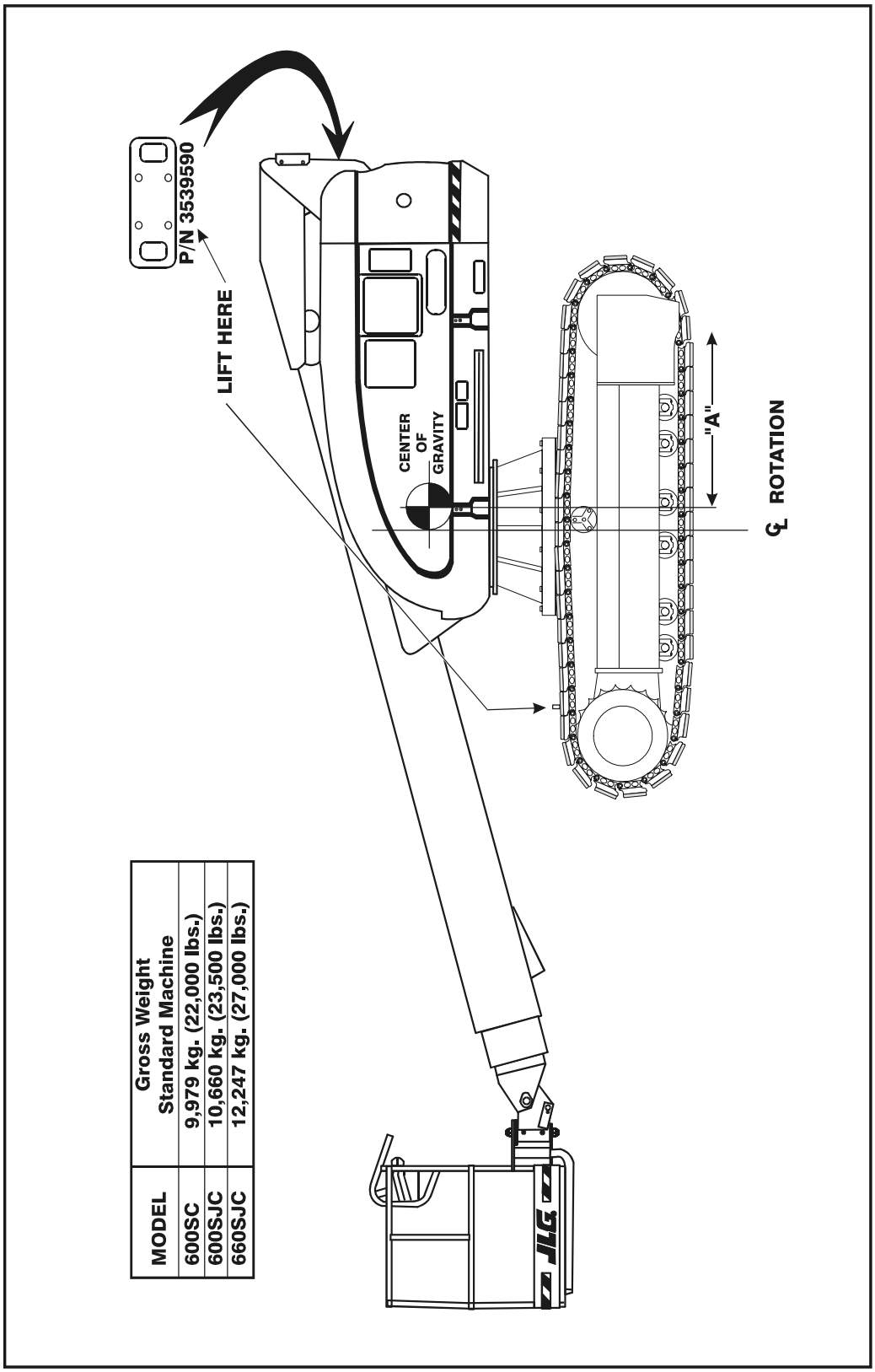

MODEL	Gross Weight Standard Machine
600SC	9,979 kg. (22,000 lbs.)
600SJC	10,660 kg. (23,500 lbs.)
660SJC	12,247 kg. (27,000 lbs.)

Figure 4-3. Lifting Chart

This page left blank intentionally.

SECTION 5. OPTIONAL EQUIPMENT

5.1 COLD START KIT (DIESEL ENGINE)

A cold weather start system in the diesel engine functions automatically to provide starting fluid, as necessary, to the engine. A sensor switch mounted on the engine will permit ether injection when the engine is cold. The sensor will not permit ether injection to a warm engine.

5.2 TRAVEL ALARM

A 12-volt alarm horn, mounted on the turntable, provides an audible warning when the machine is in the travel (DRIVE) mode. It will function in FORWARD or REVERSE to warn jobsite personnel the machine is traveling.

5.3 ELECTRIC GENERATOR

An electric generator mounted on the machine functions to supply electrical power to the platform. This device will provide enough power to run assorted power tools.

5.4 ROTATING BEACON

An amber or red rotating beacon may be installed on the hood or platform, and can be controlled by a two position toggle switch mounted on the platform control console. When the switch is placed in the ON position, the light is activated and provides a visual warning to the machine's operation.

5.5 CYLINDER BELLOWS

A one piece accordion shaped rubber bellows may be attached to the rod end of the cylinder barrel and to the cylinder rod as close to the rod attach bushing as possible. The bellows affords protection to the cylinder rod in either the extended or retracted position. The bellows are installed on the lift cylinder, slave cylinder, and master cylinder.

5.6 BOOM WIPERS

A one piece U-shaped neoprene strip, be attached to the front of the base boom section, wipes the top and both sides of the fly section. The bottom side of the fly section is protected by a straight neoprene strip which also attaches to the base section.

5.7 HOSTILE ENVIRONMENT PACKAGE

The hostile environment package provides additional protection against the entry of dust, dirt, sand and other abrasive materials into the hydraulic system, control handles and switches, cylinders, boom wire ropes and wear pads, and the air inlet of the engine. The package is intended for machines that will be exposed to painting, sandblasting or other similar hostile conditions. The hostile environment package includes boom wipers, cylinder bellows, heavy duty reservoir breather, an engine air cleaner and control console cover, as required.

5.8 MOTION ALARM

A motion alarm horn provides an audible warning when the platform controls are selected at the PLATFORM/ GROUND SELECT switch, the POWER/EMERGENCY STOP switch is ON, and the footswitch is depressed. The alarm warns personnel in the jobsite area to avoid the operating machine.

This page left blank intentionally.

SECTION 6. EMERGENCY PROCEDURES

6.1 GENERAL

This section provides information on the procedures to be followed and on the systems and controls to be used in the event an emergency situation is encountered during machine operation. Prior to operation of the machine and periodically thereafter, the entire operating manual, including this section, should be reviewed by all personnel whose responsibilities include any work or contact with the machine.

6.2 EMERGENCY TOWING PROCEDURES

Towing this machine is prohibited, unless properly equipped. However, provisions for moving the machine, in case of a malfunction or power failure, have been incorporated. The following procedures are to be used ONLY for emergency movement to a suitable maintenance area. Refer to Towing Information in Section 4.

6.3 EMERGENCY CONTROLS AND THEIR LOCATIONS

Power/Emergency Stop Switches

1. There is one of these red mushroom shaped switches at both the Ground Controls and Platform Controls. When depressed it will immediately stop the machine.

⚠ WARNING

CHECK MACHINE DAILY TO MAKE SURE EMERGENCY STOP SWITCH GUARD IS IN PLACE AND THAT GROUND CONTROL INSTRUCTIONS ARE IN PLACE AND LEGIBLE.

2. Installed on the Platform Console, this round red switch is pulled up for normal machine functions. In an emergency, push the button to the down position with your palm and machine will immediately stop.

Ground Control Station

The Ground Control Station is located on the right front side of the turntable. The controls on this panel provide the means for overriding the platform controls, and for controlling the platform level, boom and swing functions from the ground. Place the KEY SELECT switch to GROUND position and operate the proper switch to lift, swing, or telescope the boom, or level the platform.

Auxiliary Power

A toggle type auxiliary power control switch is located on the platform control station and another is located on the ground control station. Operation of either switch turns on the electrically driven auxiliary hydraulic pump. This should be used in case of failure of the main power plant. The auxiliary pump will operate boom lift, telescope and swing. To activate auxiliary power:

1. Position PLATFORM/GROUND SELECT KEY SWITCH to PLATFORM.
2. Position POWER/EMERGENCY STOP switch to ON.
3. Depress and hold footswitch.
4. Operate appropriate control switch, lever or controller for desired function and hold.
5. Position AUXILIARY POWER switch to ON and hold.
6. Release AUXILIARY POWER switch, selected control switch, lever or controller, and footswitch.
7. Position POWER/EMERGENCY STOP switch to OFF.

To activate auxiliary power from the ground control station:

1. Position PLATFORM/GROUND SELECT KEY SWITCH to GROUND.
2. Position POWER/EMERGENCY STOP switch to ON.
3. Operate appropriate control switch or controller for desired function and hold.
4. Position AUXILIARY POWER switch to ON and hold.
5. Release AUXILIARY POWER switch, and appropriate control switch or controller.
6. Position POWER/EMERGENCY STOP switch to OFF.

Manual Descent (If Equipped)

The manual descent valves are used, in the event of total power failure, to retract and lower the boom using gravity. The manual descent valves are located on the right side of the turntable (in tank compartment). Look for the instruction decal located on the right side of turntable below control valve. This system should be used if there is a total power failure since the valves will permit use of gravity to retract and lower the boom. The procedures are as follows:

1. To lower and retract the boom: Close knob #1 (clockwise), open knob #2 (counterclockwise). Observe the boom powertrack to see if the boom is lowering and retracting. When the boom is completely retracted, go to STEP #2. (If no movement is observed, go to step #2).
2. To lower boom: Open knob #1 (counterclockwise), knob #2 must remain open.

6.4 EMERGENCY OPERATION

Use of Ground Controls

KNOW HOW TO USE THE GROUND CONTROLS IN AN EMERGENCY SITUATION.

Ground personnel must be thoroughly familiar with the machine operating characteristics and the ground control functions. Training should include operation of the machine, review and understanding of this section and hands-on operation of the controls in simulated emergencies.

Operator Unable to Control Machine

IF THE PLATFORM OPERATOR IS PINNED, TRAPPED OR UNABLE TO OPERATE OR CONTROL THE MACHINE:

⚠ WARNING

DO NOT OPERATE WITH PRIMARY POWER SOURCE (ENGINE OR ELECTRIC MOTOR) IF PERSONS ARE PINNED OR TRAPPED. USE AUXILIARY POWER INSTEAD.

1. Operate the machine from ground controls ONLY with the assistance of other personnel and equipment (cranes, overhead hoists, etc.) as may be be required to safely remove the danger or emergency condition.
2. Other qualified personnel on the platform may use the platform controls with regular or auxiliary power. DO NOT CONTINUE OPERATION IF CONTROLS DO NOT FUNCTION NORMALLY.
3. Cranes, forklift trucks or other equipment which may be available are to be used to remove platform occupants and stabilize motion of the machine in case machine controls are inadequate or malfunction when used.

Platform or Boom Caught Overhead

If the platform or boom becomes jammed or snagged in overhead structures or equipment, do not continue operation of the machine from either the platform or the ground until the operator and all personnel are safely moved to a secure location. Only then should an attempt be made to free the platform using any necessary equipment and personnel. Do not operate controls to cause one or more wheels to leave the ground.

Post Incident Inspection and Repair

Following any incident, thoroughly inspect the machine and test all functions first from the ground controls, then from the platform controls. Do not lift above 10 feet (3 m) until you are sure that all damage has been repaired, if required, and that all controls are operating correctly.

6.5 INCIDENT NOTIFICATION

It is imperative that JLG Industries, Inc. be notified immediately of any incident involving a JLG product. Even if no injury or property damage is evident, the factory should be contacted by telephone and provided with all necessary details.

Contact your local JLG office.

It should be noted that failure to notify the manufacturer of an incident involving a JLG Industries product within 48 hours of such an occurrence may void any warranty consideration on that particular machine.

SECTION 7. INSPECTION AND REPAIR LOG

Table 7-1.Inspection and Repair Log

Date	Comments

SECTION 7 - INSPECTION AND REPAIR LOG

Table 7-1.Inspection and Repair Log

Date	Comments

JLG® JLG Industries, Inc.

TRANSFER OF OWNERSHIP

To: JLG, Gradall, Lull and Sky Trak product owner:

If you now own, but ARE NOT the original purchaser of the product covered by this manual, we would like to know who you are. For the purpose of receiving safety-related bulletins, it is very important to keep JLG Industries, Inc. updated with the current ownership of all JLG products. JLG maintains owner information for each JLG product and uses this information in cases where owner notification is necessary.

Please use this form to provide JLG with updated information with regard to the current ownership of JLG Products. Please return completed form to the JLG Product Safety & Reliability Department via facsimile (717) 485-6573 or mail to address as specified on the back of this form.

Thank you,
Product Safety & Reliability Department
JLG Industries, Inc.
1 JLG Drive
McConnellsburg, PA 17233-9533
Telephone: (717) 485-5161
Fax: (717) 485-6573

NOTE: Leased or rented units should not be included on this form.

Mfg. Model: _____

Serial Number: _____

Previous Owner: _____

Address: _____

City: _____ State: _____

Zip: _____ Telephone: (_____) _____

Date Of Transfer: _____

Current Owner: _____

Address: _____

City: _____ State: _____

Zip: _____ Telephone: (_____) _____

Who in your organization should we notify?

Name: _____

Title: _____

Please cut on the dotted line and fax to 717-485-6573

Corporate Office
JLG Industries, Inc.
1 JLG Drive
McConnellsburg PA. 17233-9533
USA
Phone: (717) 485-5161
Customer Support Toll Free: (877) 554-5438
Fax: (717) 485-6417

JLG Worldwide Locations

JLG Industries (Australia)
P.O. Box 5119
11 Bolwarra Road
Port Macquarie
N.S.W. 2444
Australia
Phone: (61) 2 65 811111
Fax: (61) 2 65 810122

JLG Industries (UK)
Unit 12, Southside
Bredbury Park Industrial Estate
Bredbury
Stockport
SK6 2sP
England
Phone: (44) 870 200 7700
Fax: (44) 870 200 7711

JLG Deutschland GmbH
Max Planck Strasse 21
D-27721 Ritterhude/lhlpohl
Bei Bremen
Germany
Phone: (49) 421 693 500
Fax: (49) 421 693 5035

JLG Industries (Italia)
Via Po. 22
20010 Pregnana Milanese - MI
Italy
Phone: (39) 02 9359 5210
Fax: (39) 02 9359 5845

JLG Latino Americana Ltda.
Rua Eng. Carlos Stevenson,
80-Suite 71
13092-310 Campinas-SP
Brazil
Phone: (55) 19 3295 0407
Fax: (55) 19 3295 1025

JLG Europe B.V.
Jupiterstraat 234
2132 HJ Foofddorp
The Netherlands
Phone: (31) 23 565 5665
Fax: (31) 23 557 2493

JLG Industries (Norge AS)
Sofeimyrveien 12
N-1412 Sofienyr
Norway
Phone: (47) 6682 2000
Fax: (47) 6682 2001

JLG Polska
Ul. Krolewska
00-060 Warsawa
Poland
Phone: (48) 91 4320 245
Fax: (48) 91 4358 200

JLG Industries (Europe)
Kilmartin Place,
Tannochside Park
Uddingston G71 5PH
Scotland
Phone: (44) 1 698 811005
Fax: (44) 1 698 811055

JLG Industries (Pty) Ltd.
Unit 1, 24 Industrial Complex
Herman Street
Meadowdale
Germiston
South Africa
Phone: (27) 11 453 1334
Fax: (27) 11 453 1342

Plataformas Elevadoras
JLG Iberica, S.L.
Trapadella, 2
P.I. Castellbisbal Sur
08755Castellbisbal
Spain
Phone: (34) 93 77 24700
Fax: (34) 93 77 11762

JLG Industries (Sweden)
Enkopingsvagen 150
Box 704
SE - 175 27 Jarfalla
Sweden
Phone: (46) 8 506 59500
Fax: (46) 8 506 59534